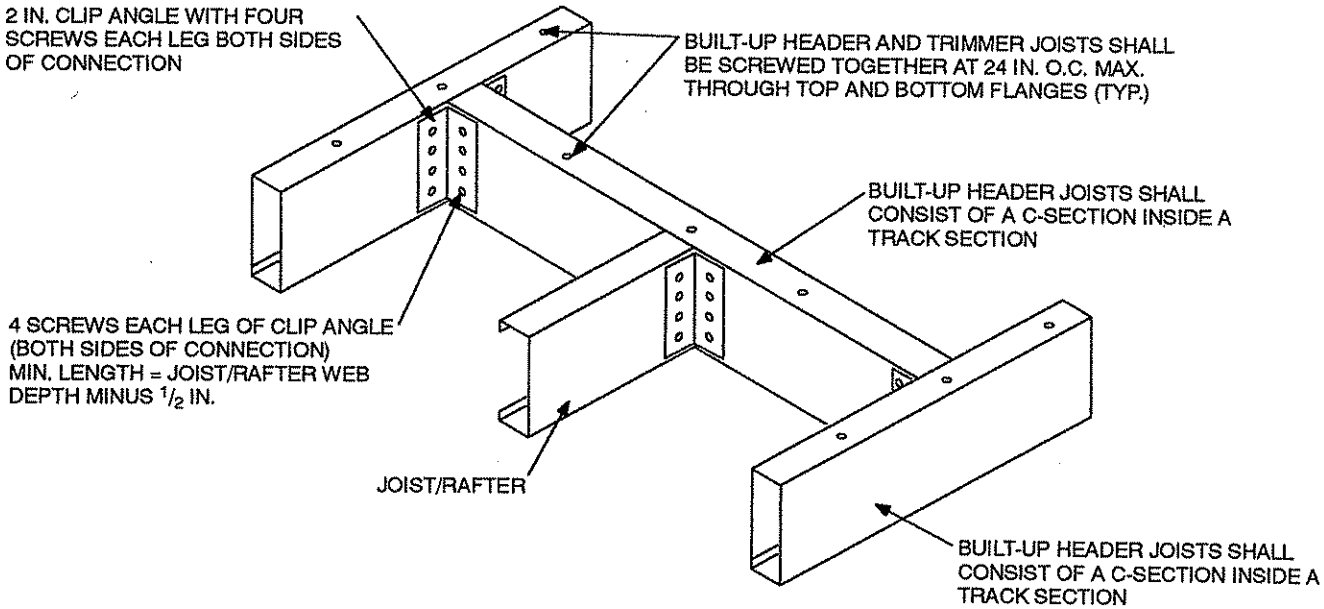

For SI: 1 inch = 25.4 mm.

FIGURE R804.3.10(2)
HEADER TO TRIMMER CONNECTION

SECTION R805
CEILING FINISHES

R805.1 Ceiling installation. Ceilings shall be installed in accordance with the requirements for interior wall finishes as provided in Section R702.

SECTION R806
ROOF VENTILATION

R806.1 Ventilation required. Enclosed attics and enclosed rafter spaces formed where ceilings are applied directly to the underside of roof rafters shall have cross ventilation for each separate space by ventilating openings protected against the entrance of rain or snow. Ventilating openings shall be provided with corrosion-resistant wire mesh, with $^1/_8$ inch (3.2 mm) minimum to $^1/_4$ inch (6 mm) maximum openings.

R806.2 Minimum area. The total net free ventilating area shall not be less than $^1/_{150}$ of the area of the space ventilated except that reduction of the total area to $^1/_{300}$ is permitted, provided that at least 50 percent and not more than 80 percent of the required ventilating area is provided by ventilators located in the upper portion of the space to be ventilated at least 3 feet (914 mm) above the eave or cornice vents with the balance of the required ventilation provided by eave or cornice vents. As an alternative, the net free cross-ventilation area may be reduced to $^1/_{300}$ when a vapor barrier having a transmission rate not exceeding 1 perm (5.7×10^{-11} kg/s · m² · Pa) is installed on the warm-in-winter side of the ceiling.

R806.3 Vent and insulation clearance. Where eave or cornice vents are installed, insulation shall not block the free flow of air. A minimum of a 1-inch (25 mm) space shall be provided between the insulation and the roof sheathing and at the location of the vent.

R806.4 Conditioned attic assemblies. Unvented conditioned attic assemblies (spaces between the ceiling joists of the top story and the roof rafters) are permitted under the following conditions:

1. No interior vapor retarders are installed on the ceiling side (attic floor) of the unvented attic assembly.
2. An air-impermeable insulation is applied in direct contact to the underside/interior of the structural roof deck. "Air-impermeable" shall be defined by ASTM E 283.

   Exception: In Zones 2B and 3B, insulation is not required to be air impermeable.
3. In the warm humid locations as defined in Section N1101.2.1:

   3.1. For asphalt roofing shingles: A 1-perm (5.7×10^{-11} kg/s · m² · Pa) or less vapor retarder (determined using Procedure B of ASTM E 96) is placed to the exterior of the structural roof deck; that is, just above the roof structural sheathing.

   3.2. For wood shingles and shakes: a minimum continuous $^1/_4$-inch (6 mm) vented air space separates the shingles/shakes and the roofing felt placed over the structural sheathing.
4. In Zones 3 through 8 as defined in Section N1101.2, sufficient insulation is installed to maintain the monthly average temperature of the condensing surface above 45°F (7°C). The condensing surface is defined as either

the structural roof deck or the interior surface of an air-impermeable insulation applied in direct contact with the underside/interior of the structural roof deck. "Air-impermeable" is quantitatively defined by ASTM E 283. For calculation purposes, an interior temperature of 68°F (20°C) is assumed. The exterior temperature is assumed to be the monthly average outside temperature.

SECTION R807
ATTIC ACCESS

R807.1 Attic access. Buildings with combustible ceiling or roof construction shall have an attic access opening to attic areas that exceed 30 square feet (2.8 m^2) and have a vertical height of 30 inches (762 mm) or more.

The rough-framed opening shall not be less than 22 inches by 30 inches (559 mm by 762 mm) and shall be located in a hallway or other readily accessible location. A 30-inch (762 mm) minimum unobstructed headroom in the attic space shall be provided at some point above the access opening. See Section M1305.1.3 for access requirements where mechanical equipment is located in attics.

SECTION R808
INSULATION CLEARANCE

R808.1 Combustible insulation. Combustible insulation shall be separated a minimum of 3 inches (76 mm) from recessed luminaires, fan motors and other heat-producing devices.

Exception: Where heat-producing devices are listed for lesser clearances, combustible insulation complying with the listing requirements shall be separated in accordance with the conditions stipulated in the listing.

Recessed luminaires installed in the building thermal envelope shall meet the requirements of Section N1102.4.3.