Index of Drawings

GENERAL

G100 Abbreviations, Symbols,Typical Details, Mounting Heights, Wall Types

LIFE SAFETY

LS100 Code Summary & Life Safety Plans

ARCHITECTURAL

AD101 First Floor Level Demolition Plan
AD102 Balcony Level Demolition Plan
A100 Basement Floor Plan
A101 First Floor Construction Plan
A102 Balcony Level Construction Plans
A110 Enlarged Plans - Restrooms & Stairs
A200 Exterior Elevations
A201 Exterior Elevations
A202 Building Sections / Interior Elevations
A203 Building Sections
A300 Wall & Stair Sections
A400 Plan and Section Details
A500 Interior Elevations
A501 Frame Types, Door Schedule, Room Finish Schedule
A700 First Floor Reflected Ceiling Plan
A701 Balcony Level Reflected Ceiling Plan

STRUCTURAL

S100 Structural Schedules and Standard Details
S101 Structural Details
S102 Structural Details

MECHANICAL

M001 Mechanical Legend and Sheet List
MD100 Lower Level HVAC Demo Plan
MD101 First Level Mechanical Demolition Plan
P101 First Level Plumbing Plan
M101 First Level Mechanical Plan
M102 Second Level Mechanical Plan
M401 Mechanical Sections
M601 Mechanical Details
M701 Mechanical Schedules
M702 Mechanical Schedules

ELECTRICAL

E001 Electrical Legend and Abbreviations
ED100 Lower Level Power and Systems Demo Plan
ED101 First Level Power and Systems Demo Plan
ED102 Second Level and Upper Bowl Power and Systems Demo Plan
ED201 First Level and Upper Lobby Lighting Demo Plan
ED202 Auditorium Lighting Demo Plan
E100 Lower Level Power and Systems Plan
E101 First Level Power and Systems Plan
E102 Second Level and Upper Bowl Power and Systems Plan
E103 Attic Power and Systems Plan
E201 First Level Lighting Plan
E202 Second Level Lighting Plan
E203 Auditorium Lighting Plan
E301 Electrical One-Line Diagram and Panel Schedues
E401 Electrical Details
E402 Electrical Details and Schedules

Hastings City Auditorium Interior Renovation

City of Hastings

400 North Hastings Avenue,
Hastings, NE 68901

Bid Documents

November 9th 2015

SHA Project No. 15011

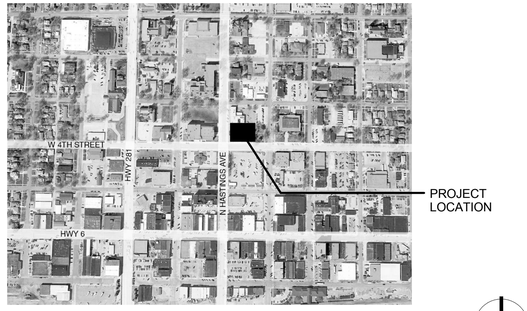

Vicinity Map

Master Keynote List

Drawing Keynote System

A keynoting system is used on the drawings for materials reference and notes. Refer to the keynote legend on the drawing for the information which relates to each keynote symbol on the respective drawing.

Each keynote symbol consists of a 6-digit number followed by a period and a letter suffix. The 6-digit number relates to the specification section which generally covers the items that is referenced, and the letter suffix combined with the 6-digit number and period creates a keynote symbol which identifies the specific reference notation used on the drawings. The letter suffix does not relate to any corresponding reference letter in the specification

THE ORGANIZATION OF THE KEYNOTING SYSTEM ON THE DRAWINGS, WITH THE KEYNOTE REFERENCE NUMBERS RELATED TO THE SPECIFICATION SECTIONS NUMBERING SYSTEM SHALL NOT CONTROL THE CONTRACTOR IN DIVIDING THE WORK AMONG SUBCONTRACTORS OR IN ESTABLISHING THE EXTENT OF WORK TO BE PERFORMED BY ANY TRADE.

024119.A	REMOVE DOOR, FRAME, AND ALL ASSOCIATED HARDWARE.
024119.AA	REMOVE LAY-IN CEILING IN ITS ENTIRETY
024119.B	DISMANTLE EXTERIOR FIRE ESCAPE ASSEMBLY , INCLUDING RAILINGS AND LANDINGS, IN ITS ENTIRETY
024119.C	REMOVE WALL ASSEMBLY IN ITS ENTIRETY
024119.CC	REMOVE TRASH ENCLOSURE IN ITS ENTIRETY
024119.D	REMOVE AND SALVAGE PLUMBING FIXTURES.
024119.DD	TREE TO BE REMOVED; COORDINATE WITH OWNER
024119.E	REMOVE COUNTERTOP
024119.EE	REMOVE CARPETING AND WALL BASE
024119.F	REMOVE WALL COVERING; SKIM COAT AND PREPARE FOR NEW FINISH AS SCHEDULED
024119.F2	REMOVE WALL COVERING; WALL TO RECEIVE ACOUSTICAL PANEL AS SCHEDULED
024119.FF	REMOVE DRINKING FOUNTAIN
024119.G	REMOVE WALL TO EXTENT SHOWN. SEE NEW PLAN FOR REQUIRED CLEARANCES
024119.GG	REMOVE GUTTER; EXISTING DOWNSPOUT TO REMAIN
024119.H	REMOVE PLASTERWORK FROM UNDERSIDE OF PORTICO ROOF AND BEAMS
024119.HH	REMOVE CHAINLINK GATE AND ENCLOSURE
024119.J	REMOVE DAMAGED PORTION OF CONCRETE BASE AS REQUIRED TO ACCOMMODATE INFILL AND REPAIR
024119.K	REMOVE AND REINSTALL WOOD BATTEN STRIP SERVING AS WALLCOVERING TERMINATION.
024119.L	REMOVE AND REINSTALL WALL SCONCE AND WOOD PANEL BACKING AS INDICATED ON NEW CONSTRUCTION PLAN
024119.M	REMOVE AND REINSTALL WALL SCONCE AND WOOD PANEL BACKING AS REQUIRED FOR INSTALLATION OF NEW SCHEDULED FINISHES.
024119.MM	REMOVE EXISTING FLOORING AS REQUIRED FOR INSTALLATION OF NEW FLOOR DRAIN AS SHOWN ON PLUMBING DRAWINGS. PATCH AND REPAIR AS REQUIRED TO MATCH SURROUNDING CONDITIONS
024119.N	REMOVE VINYL TILE FLOORING. SEE FINISH SCHEDULE FOR REQUIRED FLOOR PREP PRIOR TO INSTALL OF NEW FLOORING
024119.NN	CUT OPENING AS REQUIRED FOR SCHEDULED OPENING
024119.O	COORDINATE NEW HVAC PENETRATIONS WITH MECHANICAL
024119.OO	REMOVE DOOR HANDLESET AS REQUIRED FOR NEW SCHEDULED HARDWARE
024119.P	REMOVE GLAZING AND SASH AS REQUIRED FOR NEW SCHEDULED WINDOW PANNING SYSTEM
024119.PP	REMOVE HANDRAIL IN ITS ENTIRETY
024119.Q	REMOVE AND SALVAGE SEATS AS REQUIRED TO ACCOMMODATRE NEW CONSTRUCTION PLAN SHOWN; RETURN TO OWNERS STOCK
024119.R	REMOVE FABRIC VALANCES AND ROLLER BLINDS
024119.S	SAW-CUT MASONRY OPENING AS REQUIRED FOR INSTALLATION OF NEW SCHEDULED OPENING
024119.T	REMOVE EPDM MEMBRANE ROOFING ASSEMBLY IN ITS ENTIRTY
024119.U	REMOVE EXTENT OF RAILING AND LOWER BALCONY WALL AS REQUIRED FOR ATTACHMENT OF NEW STEEL PAN STAIR LANDING
024119.V	DISMANTLE BOILER IN ITS ENTIRETY; SEE MECHANICAL DRAWINGS
024119.W	REMOVE AND SALVAGE AISLE END PANEL; REINSTALL PER NEW LAYOUT. SEE ELECTRICAL FOR POWER AND LIGHTING MODIFICATIONS
024119.X	REMOVE ALL WALL-MOUNTED TOILET ACCESSORIES
024119.Y	REMOVE AND SALVAGE TOILET PARTITION AND ALL ASSOCIATED HARDWARE
024119.Z	REMOVE AND SALVAGE URINAL SCREEN AND ALL ASSOCIATED HARDWARE
024119JJ	
033000.A	EXTEND EXISTING CONCRETE STEP TO FILL VOID REMAINING FROM REMOVAL OF FIXED SEAT; MATCH EXISTING PROFILE – SEE STRUCTURAL
033000.B	CAST CONCRETE FOOTING – SEE STRUCTURAL
033000.C	PATCH/REPAIR CONCRETE AS REQUIRED FROM REMOVAL OF SEATING
033000.D	8" CONCRETE CURB – SEE STRUCTURAL
033000.E	7" CONCRETE PAD OVER 12" STABALIZED AND COMPACTED SUBGRADE
033000.F	REPLACE AND PATCH DETERIORATED CONCRETE BASE; APPLY PRIMER AND STAIN AS SPECIFIED
033000.G	CONCRETE STEPS
033000.H	CONCRETE LANDING
042000.A	8" CMU
042000.A2	6" CMU
042000.B	BRICK VENEER
042000.B2	BRICK MASONRY INFILL; MATCH EXISTING THICKNESS. TOOTH BRICK VENEER INTO EXISTING
042000.B3	
042000.B4	MASONRY SILL TO MATCH EXISTING
042000.C	TERRA-COTTA SILL; MATCH EXISTING PROFILE, COLOR, AND FINISH
042000.D	PROVIDE RAKED JOINT FOR BACKER ROD AND SEALANT
054000.A	4" – 20 GAUGE STUDS @ 16" O.C.
054000.B	SHOOT STUD WEB TO ANGLE @ 12"
054000.D	4" – 20 GAUGE STUD. SHOOT WEB TO1/4" PLATES ON CHANNELW/ 2 –ANCHORS @ EACH PLATE.
054000.F	3-5/8" – 14 GAUGE STUDS, BACK TO BACK; CONFIRM REQUIREMENTS WITH COILING COUNTER DOOR MANUFACTURER
055000.B	STEEL LINTEL AT NEW OPENING; SEE STRUCTURAL
055000.C	STEEL GATE POST; SEE STRUCTURAL
055000.D	HSS4x2x3/16 STEEL MECHANICAL ENCLOSURE GATE FRAME
055000.E	L1x1x1/8 STEEL MECHANICAL ENCLOSURE PANEL STOP
055000.F	GATE DROP ROD
055000.G	GATE LATCH ASSEMBLY
055000.H	6" STEEL GATE COLLAR – FREE TO PIVOT
055000.J	STEEL CONNECTION PLATE
055000.K	L3x3x1/4x7'-0" AT EACH 8'-0" WALL LIFT. BOLT TO EXISTING MASONRY W/ ½" DIAx7" EMBED ADHESIVE GROUTED BOLTS W/ SLEEVES @ 2'-0"
055000.L	C4x5.4x8'-0". BOLT TO EXISTING MASONRY W/ ½" DIA x 7" EMBED ADHESIVE GROUTED BOLTS W/ SLEEVES @ 2'-0"
055000.M	¼ x 6" PLATE @ 2'-0" CENTERED BETWEEN BOLTS. SHOPWELD FLUSH TO CHANNEL FLANGES
055113.A	PREASSEMBLED STEEL STAIRS WITH CONCRETE-FILLED TREADS
055113.B	STEEL PAN LANDING
055213.A	STEEL HANDRAIL, 1-1/4" DIAMETER, WALL-MOUNTED – PAINT FINISH
055213.B	STEEL HANDRAIL, 1-1/4" DIAMETER, FLOOR-MOUNTED – PAINT FINISH
055213.C	STEEL GUARDRAIL; MATCH EXISTING
055213.D	ONE-PIECE ALUMINUM STUD & ½"CAP
055213.E	PROVIDE STANDOFF AT TOP OF PANEL CONNECTION
055213.F	½" SQUARE STEEL PICKET
055213.G	½" x 1-1/2" STEEL HORIZONTAL BAR
055213.H	1" SQUARE STEEL POST
055213.J	RAILING CONNECTIONS PROVIDED BY STEEL FABRICATOR
055213.K	STEEL HANDRAIL, RETURN TO KNEE-WALL BELOW
061053.A	WOOD BLOCKING
061053.B	1x6 CEDAR PANELS – SECURE TO ENCLOSURE GATE BETWEEN STEEL ANGLE PANEL STOPS
061053.C	PROVIDE NAILER FOR WOOD TRIM
061600.A	7/16" OSB SHEATHING. VERTICAL AND HORIZONTAL PANEL JOINTS SHALL FALL OVER FRAMING. SCREW SHEATHING TO FRAMING WITH #10 SCREWS @ 6" O.C.
061600.C	5/8" OSB SHETAHING. ATTACH TO CHANNEL FLANGE WITH SHOT ANCHORS @ 6" O.C.
062023.A	EXISTING WOOD TRIM; RESTORE DAMAGED OR SOILED AREAS AND TOUCH-UP FINISH AS NEEDED TO ACHIEVE UNIFORM APPEARANCE.
062023.B	WOOD WALL CAP; MATCH EXISTING PROFILE & FINISH
062023.C	WOOD TRIM; MATCH EXISTING PROFILE & FINISH
062023.D	WOOD TRIM; RIFT-CUT RED OAK, EASE EDGES
072500.A	BUILDING WRAP
074213.A	METAL LINER PANEL
074213.B	PREFINISHED CORNER FLASHING
074213.C	PREFINISHED "J" CHANNEL
074213.D	STANDING SEAM ROOFING
075323.A	EPDM FLEECEBACK ROOFING SYSTEM
075323.B	SEALANT
076200.A	MANUFACTURED PREFINISHED COPING SYSTEM
076200.B	NEW GUTTER; TIE IN TO EXISTING DOWNSPOUT
076200.C	MANUFACTURED PREFINISHED PIER CAP
076200.D	TERMINATION BAR
076200.E	SHEET METAL FASCIA AND CONTINUOUS GALVANIZED CLEAT
076200.F	TWO PIECE FLASHING AND REGLET INTO EXISTING MASONRY
079200.A	ELASTOMERIC JOINT SEALANT
079200.B	ELASTOMERIC JOINT SEALANT AND BACKER ROD
081213.A	INTERIOR HOLLOW METAL FRAME
081416.A	SOLID CORE FLUSH SLAB WOOD DOOR
083313.A	COILING COUNTER DOOR
085113.A	MANUFACTURED WINDOW PANNING SYSTEM; PROVIDE NEW WOOD WINDOW BUCK TO MATCH EXISTING WINDOW PROFILES
085113.B	GLAZING UNIT
088000.A	60 MINUTE FIRE-RATED VISION LITE
088400.A	MONOLITHIC CLEAR SCRATCH-RESISTANT ACRYLIC GLAZING PANELS; ATTACH TO OUTSIDE FACE OF EXISTING GUARDRAIL ASSEMBLY
088400.B	MONOLITHIC CLEAR SCRATCH-RESISTANT ACRYLIC GLAZING PANEL; ATTACH TO FACE OF GUARDRAIL ASSEMBLY
092216.A	3-5/8" METAL STUD
092216.B	4" – 20 GAUGE STUDS @ 16" O.C.
092216.D	4" – 14 GAUGE TRACK
092216.F	BOX BEAM HEADER
092216.G	4"-14 GA TRACK; SHOOT WEB TO ¼" PLATES ON CHANNEL W/2 ANCHORS AT EACH PLATE
092216.H	3-5/8" METAL RUNNER TRACK
092216.J	BULKHEAD
092400.A	PATCH EXISTING PLASTER CEILING AS NEEDED TO MAINTAIN 1HR RATING
092400.B	NEW EXTERIOR PLASTERWORK ON UNDERSIDE OF PORTICO ROOF
092400.C	PATCH EXISTING PLASTER CEILING AS REQUIRED TO PROVIDE SEAMLESS FINISH
092900.A	5/8" TYPE 'X' GYPSUM WALLBOARD
092900.B	½" GYPSUM CEILING BOARD
092900.C	SOUND ATTENUATION BLANKETS
092900.D	PATCH & REPAIR GWB FINISH
093013.A	QUARRY TILE BASE; MATCH EXISTING
095113.A	SUSPENDED ACOUSTICAL PANEL CEILING
095113.B	EXTRUDED ALUMINUM PERIMETER TRIM
096513.A	SCHEDULED RESILIENT WALL BASE
096513.B	FLOORING TRANSITION STRIP
096519.A	VINYL COMPOSITION FLOOR TILE
096519.B	FLOORING TRANSITION
097200.A	SCHEDULED WALL COVERING
097200.A1	WALLCOVERING 1
097200.A2	WALLCOVERING 2
097200.A3	WALLCOVERING 3; WRAP SPECIFIED ACOUSTICAL BOARD
097200.B	ACOUSTICAL BOARD
099113.A	PAINT FINISH; SEE SPECIFICATIONS
099123.A	PAINT EXISTING CEILING TILE – SEE FINISH SCHEDULE
099123.B	PAINT FINISH; SEE FINISH SCHEDULE
099123.B1	FIELD PAINT, PNT1 – SEE SPECIFICATIONS
099123.B2	ACCENT PAINT, PNT2 – SEE SPECIFICATIONS
099123.B3	EXISTING MECHANICAL LOUVER; PAINT TO MATCH ADJACENT SURFACE
099123.B4	EXISTING GWB SOFFIT; PAINT FINISH – SEE FINISH SCHEDULE
099500.A	EPOXY BROADCAST SYSTEM FLOORING
102113.A	TOILET PARTITION; FLOOR-MOUNTED/OVERHEAD BRACED
102113.B	URINAL SCREEN
102239.A	FOLDING PANEL PARTITION
102800.A	TOILET TISSUE DISPENSER
102800.B1	GRAB BAR – 42" LENGTH
102800.B2	GRAB BAR – 36" LENGTH
102800.B3	GRAB BAR – VERTICAL – 18" HEIGHT MINIMUM
102800.C	SANITARY NAPKIN DISPOSAL UNIT
102800.D	AUTOMATIC HAND DRYER
102800.E	LIQUID-SOAP DISPENSER
102800.F	MIRROR
122413.A	ROLLER WINDOW SHADE
122413.B	FRONT FASCIA
122413.C	ROOM DARKENING END CHANNELS
123623.A	PLASTIC-LAMINATE-CLAD COUNTERTOP WITH BACKSPLASH, SIDESPLASH, & FRONT APRON
123623.A2	PLASTIC-LAMINATE-CLAD COUNTERTOP – 6'-0" WIDE X 2'-0" DEEP
123623.A3	PLASTIC-LAMINATE-CLAD COUNTERTOP – 4'-0" WIDE X 2'-0" DEEP
123623.B	SUPPORT BRACKET
123623.C	PLASTIC-LAMINATE CLAD SUPPORT WALL
224213.A	WATER CLOSET; SEE MECHANICAL
224213.B	URINAL; SEE MECHANICAL
224216.A	LAVATORY & FAUCET; SEE MECHANICAL
224216.B	SINGLE BOWL SINK & FAUCET; SEE MECHANICAL
224713.A	DRINKING FOUNTAIN; SEE MECHANICAL
233713.A	FABRIC DUCT; SEE MECHANICAL
260000.A	RELOCATED WALL SCONCE FROM SALVAGE
260000.B	PENDANT LIGHT FIXTURE

Site Staging Plan

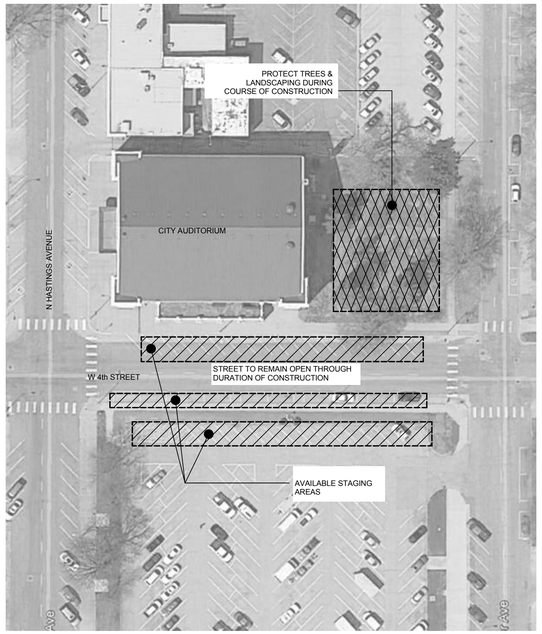

Professional Seals

COORDINATING PROFESSIONAL ARCHITECT

STRUCTURAL ENGINEER

MECHANICAL ENGINEER

ELECTRICAL ENGINEER

Project Consultants

VOSS & ASSOCIATES Inc.
STRUCTURAL ENGINEERS

STRUCTURAL ENGINEER
Voss & Associates
201 N. 7th Street, Ste 200
Lincoln, NE 68508
402.476.6365

OLSSON ASSOCIATES

MECHANICAL/ELECTRICAL ENGINEERS
Olsson Associates
601 P Street, Suite 200
Lincoln, NE 68508
402.474.6311

SINCLAIR hille architects

700 Q St. Lincoln, NE 68508

T: 402 476 7331 F: 402 476 8341

© Copyright SINCLAIR HILLE ARCHITECTS

DOOR SCHEDULE

Door No.	Door Size	F.R.	DOOR Elev.	DOOR Mat'l	DOOR Fin.	FRAME Type	FRAME Mat'l	FRAME Fin.	Hdwr. Set	NOTES	Door No.
001	3'-0" x 7'-0" EXTG		-	-	-	-	-	-	(none)	1	001
002	3'-0" x 7'-0" EXTG		-	-	-	-	-	-	(none)	1	002
101	3'-0" x 7'-0"	60 MIN	F	WD	STN	HM-1	HM	PNT	(none)		101
102	3'-0" x 7'-0" EXTG		-	-	-	-	-	-	1	1	102
103	3'-0" x 7'-0" EXTG		-	-	-	-	-	-	1	1	103
104	3'-0" x 7'-0" EXTG		-	-	-	-	-	-	1	1	104
105	PAIR 3'-0" x 7'-0" EXTG		-	-	-	-	-	-	2	1	105
106	PAIR 3'-0" x 7'-0"	45 MIN	F	WD	STN	HM-1	HM	PNT	3		106
108	3'-0" x 7'-0"		F	WD	STN	HM 1	HM	PNT	1		108
109	PAIR 3'-0" x 7'-0" EXTG		-	-	-	-	-	-	2	1	109
110	3'-0" x 7'-0"		-	-	-	-	-	-	1	2	110
110B	PAIR 3'-0" x 7'-0" EXTG		-	-	-	-	-	-	5	1	110B
111A	PAIR 3'-0" x 7'-0"	60 MIN	V	WD	STN	HM-1	HM	PNT	4		111A
111B	PAIR 3'-0" x 7'-0"	60 MIN	V	WD	STN	HM-1	HM	PNT	4		111B
111C	PAIR 3'-0" x 7'-0"	60 MIN	V	WD	STN	HM-1	HM	PNT	4		111C
111D	PAIR 3'-0" x 7'-0"	60 MIN	V	WD	STN	HM-1	HM	PNT	4		111D
111E	PAIR 3'-0" x 7'-0" EXTG		-	-	-	-	-	-	5	1	111E
111F	PAIR 3'-0" x 7'-0" EXTG		-	-	-	-	-	-	5	1	111F
111G	PAIR 3'-0" x 7'-0" EXTG		-	-	-	-	-	-	5	1	111G
112	3'-0" x 7'-0"	45 MIN	F	WD	STN	HM 1	HM	PNT	3	5	112
114	PAIR 2'-6" x 7'-0" EXTG		-	-	-	-	-	-	1	1	114
115	3'-0" x 7'-0" EXTG		-	-	-	-	-	-	1	1	115
116	2'-0" x 7'-0" EXTG			-	-	-	-	-	(none)	1	116
117	3'-0" x 7'-0"	60 MIN	F	WD	STN	HM-1	HM	PNT	(none)		117
118	3'-0" x 7'-0" EXTG		-	-	-	-	-	-	(none)	1	118
121	3'-0" x 7'-0" EXTG		-	-	-	-	-	-	(none)	1	121
122	3'-0" x 7'-0" EXTG		-	-	-	-	-	-	(none)	1	122
123	3'-0" x 7'-0" EXTG		-	-	-	-	-	-	(none)	1	123
125	2'-0" x 7'-0" EXTG			-	-	-	-	-	1	1	125
201A	3'-0" x 7'-0"	60 MIN	F	WD	STN	HM-1	HM	PNT	6		201A
201B	PAIR 3'-0" x 7'-0"	60 MIN	V	WD	STN	HM-1	HM	PNT	7		201B
201C	3'-0" x 7'-0"	60 MIN	F	WD	STN	HM-1	HM	PNT	1		201C
201D	3'-0" x 7'-0"	60 MIN	F	WD	STN	HM-1	HM	PNT	6		201D
304	3'-0" x 7'-0" EXTG		-	-	-	-	-	-	(none)	1	304
305	3'-0" x 7'-0" EXTG		-	-	-	-	-	-	(none)	1	305
306	3'-0" x 7'-0" EXTG		-	-	-	-	-	-	(none)	1	306
307	3'-0" x 7'-0" EXTG		-	-	-	-	-	-	(none)	1	307
400	3'-0" x 7'-0" EXTG		-	-	-	-	-	-	(none)	1	400

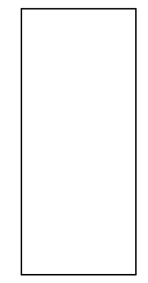

F

081416.A

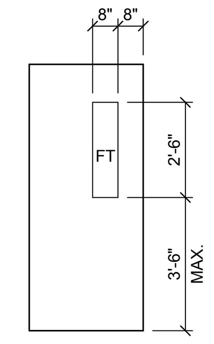

V

081416.A
088000.A

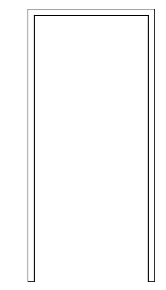

HM-1

081213.A

DOOR SCHEDULE NOTES

1. EXISTING DOOR TO REMAIN; TOUCH-UP PAINT AND STAIN FINISH AS REQUIRED TO ACHIEVE A CONSISTANT LEVEL OF FINISH
2. DOOR/HARDWARE PROVIDED BY MOVABLE WALL MANUFACTURER

J1 DOOR SCHEDULE, DOOR & FRAME TYPES

SCALE: 1/4" = 1'-0"

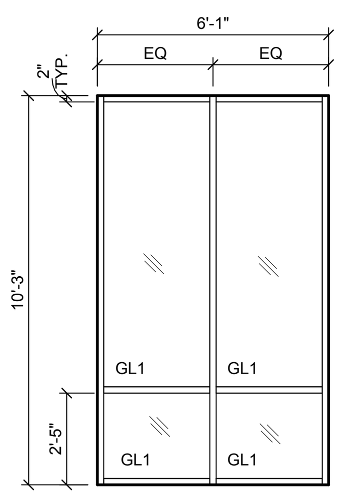

085113.A / 085113.B
FIELD VERIFY ALL
EXISTING WOOD
FRAME DIMENSIONS

AL1

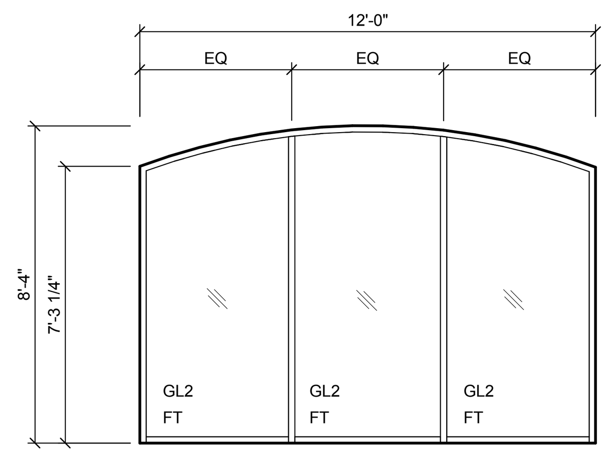

085113.A
FIELD VERIFY ALL
EXISTING WOOD
FRAME DIMENSIONS

AL2

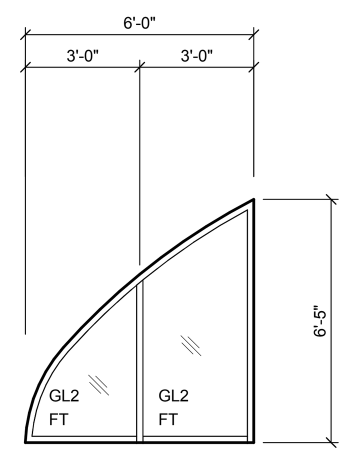

085113.A
FIELD VERIFY ALL
EXISTING WOOD
FRAME DIMENSIONS

AL3

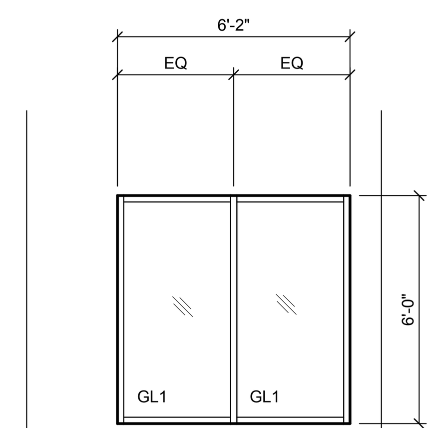

085113.A
FIELD VERIFY ALL
EXISTING WOOD
FRAME DIMENSIONS

AL4

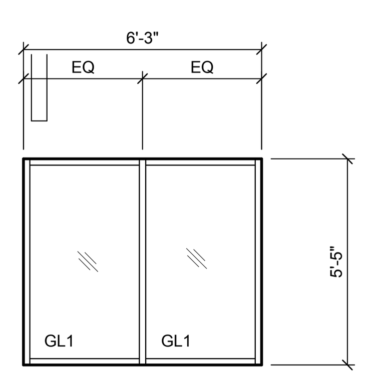

085113.A
FIELD VERIFY ALL
EXISTING WOOD
FRAME DIMENSIONS

AL5

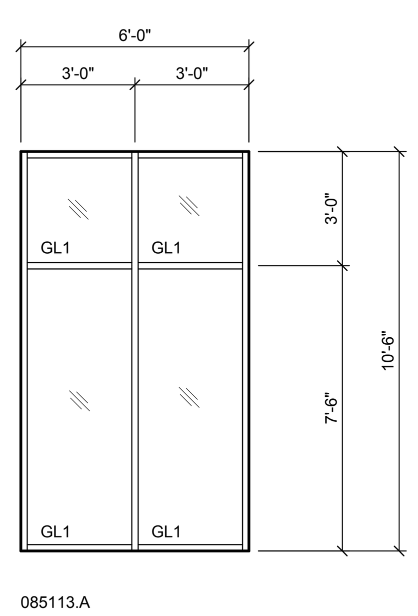

085113.A
FIELD VERIFY ALL
EXISTING WOOD
FRAME DIMENSIONS

AL6

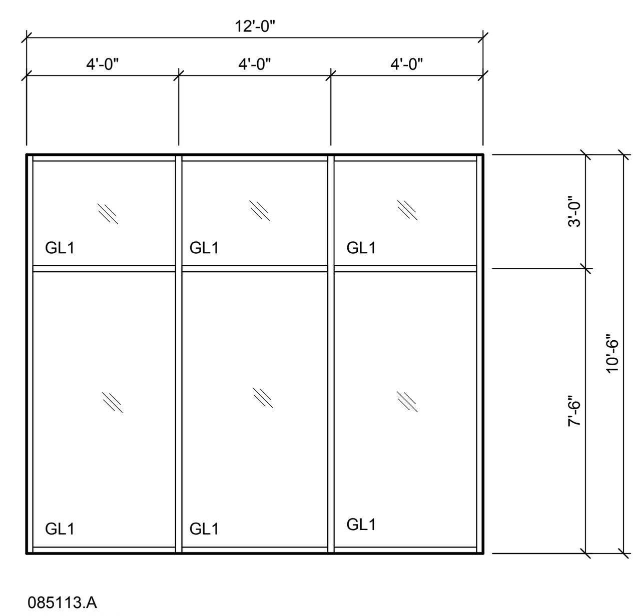

085113.A
FIELD VERIFY ALL
EXISTING WOOD
FRAME DIMENSIONS

AL7

C1 ALUMINUM WINDOW /PANNING SYSTEM TYPES

SCALE: 1/4" = 1'-0"

ROOM FINISH SCHEDULE

No.	Name	Floor Finish	Base	North Wall Material	North Wall Finish	East Wall Material	East Wall Finish	South Wall Material	South Wall Finish	West Wall Material	West Wall Finish	Ceiling Material	Ceiling Finish	NOTES	No.
100	LOBBY	EXTG	EXTG	GWB	WC2	GWB	WC2	GWB	WC2	GWB	WC2/PNT	APC		4, 6	100
101	MEN	EXTG	EXTG/QT	GWB	WC2	EXTG	PNT	GWB	WC2 \ PNT	GWB	WC2	APC		10, 11	101
102	JAN	EXTG	EXTG	EXTG	EXTG	EXTG	EXTG	EXTG	EXTG	EXTG	EXTG	EXTG			102
103	CLOSET	EXTG	EXTG	EXTG	EXTG	EXTG	EXTG	EXTG	EXTG	EXTG	EXTG	EXTG			103
104	KITCHEN	VCT1	VWB1	GWB	EXTG	GWB	EXTG	GWB	EXTG	GWB	EXTG	EXTG		1	104
105	STAIR 1	EXTG	VWB1	GWB	WC2	GWB	WC2	GWB	WC2	GWB	WC2	APC			105
106	STORAGE	EXTG	VWB1	GWB	PNT1	EXTG	PNT1	GWB	PNT1	GWB	PNT1	APC			106
107	ALCOVE	EXTG	VWB1	GWB	WC1/2	EXTG	PNT1/2			GWB	WC1/2	APC		3	107
108	CORRIDOR	EXTG	VWB1	GWB	WC2	EXTG	PNT1/2	EXTG	PNT1	GWB	PNT1	APC		6, 8	108
109	STAIR 2	EXTG	VWB1	GWB	WC2	GWB	WC2	GWB	WC2	GWB	WC2	APC			109
110	MEETING RM	EXTG	VWB1	-	-	GWB	WC1/2	GWB	WC1/2	-	-	APC		3, 6, 9	110
111	AUDITORIUM	EXTG	VWB1	GWB	WC/PNT	EXTG	PNT	GWB	WC/PNT	GWB	WC	APC		3, 5, 6, 7	111
112	BAR / STORAGE	EXTG	VWB1	GWB	PNT1	GWB	WC2	GWB	WC2	GWB	WC2	APC		6	112
114	STAIR	EXTG	EXTG	EXTG	PNT1	EXTG	PNT1	EXTG	PNT1	EXTG	PNT1	EXTG			114
115	CLO	EXTG	EXTG	EXTG	EXTG	EXTG	EXTG	EXTG	EXTG	EXTG	EXTG	-			115
116	CLO	EXTG	EXTG	EXTG	EXTG	EXTG	EXTG	EXTG	EXTG	EXTG	EXTG	-			116
117	WOMEN	EXTG	EXTG	GWB	WC2	EXTG	PNT1	GWB	WC2	GWB	WC2	APC		11	117
118	JAN	EXTG	EXTG	EXTG	EXTG	EXTG	EXTG	EXTG	EXTG	EXTG	EXTG	-			118
119	STAGE	EXTG	EXTG	EXTG	EXTG	EXTG	EXTG	EXTG	EXTG	EXTG	EXTG	-			119
121	DRESSING RM	VCT1	VWB1	EXTG	PNT1	EXTG	PNT1	EXTG	PNT1	EXTG	PNT1	APC			121
122	DRESSING RM	VCT1	VWB1	EXTG	PNT1	EXTG	PNT1	EXTG	PNT1	EXTG	PNT1	APC			122
123	TLT	VCT1	VWB1	EXTG	PNT1	EXTG	PNT1	EXTG	PNT1	EXTG	PNT1	APC			123
125	TLT	VCT1	VWB1	EXTG	PNT1	EXTG	PNT1	EXTG	PNT1	EXTG	PNT1	APC			125
200	BALCONY	EXTG	VWB1	EXTG	WC/PNT	EXTG	PNT	EXTG	WC \ PNT	EXTG	WC/PNT	APC		6, 7	200
201	UPPER LOBBY	MFS	EXTG	EXTG	PNT1	EXTG	PNT1	EXTG	PNT1	EXTG	PNT1	-			201
300	UPPER BOWL	EXTG	VWB1	EXTG \ GWB	PNT			EXTG \ GWB	WC \ PNT	EXTG	PNT	APC		6, 7	300
301	PROJECTOR ROOM	EXTG	EXTG	EXTG	EXTG	EXTG	EXTG	EXTG	EXTG	EXTG	EXTG	EXTG			301
302	EXIT RAMP 1	EXTG	VWB	EXTG	PNT			EXTG	PNT			APC		3	302
303	EXIT RAMP 2	EXTG	VWB	EXTG	PNT			EXTG	PNT			APC		3	303
304	DRESSING RM	VCT1	VWB1	EXTG	PNT1	EXTG	PNT1	EXTG	PNT1	EXTG	PNT1	APC			304
305	DRESSING RM	VCT1	VWB1	EXTG	PNT1	EXTG	PNT1	EXTG	PNT1	EXTG	PNT1	APC			305
306	TLT														306
307	TLT														307
400	ATTIC	EXTG	EXTG	EXTG	EXTG	EXTG	EXTG	EXTG	EXTG	EXTG	EXTG	-		2	400

ROOM FINISH SCHEDULE NOTES

1. PROVIDE VINYL FLOOR PROTECTANT; SEE SPECIFICATIONS
2. PATCH AND REPAIR PLASTER FLOOR ASSEMBLY AS REQUIRED TO MAINTAIN 1 HOUR FIRE RATING
3. SEE DETAILS AND ELEVATIONS FOR FINISH EXTENTS
4. REMOVE AND REINSTALL WOOD BATTEN WALLCOVERING TERMINATION AS REQUIRED
5. PAINT RISER (VERTICAL) PORTION OF MOVABLE STAIR RISER PNT1
6. REINSTALL ALL WOOD TRIM, CASING, AND CROWN MOULDING REMOVED TO ACCOMMODATE NEW WALLCOVERING. TOUCH-UP FINISH AS NEEDED TO ACHIEVE SEAMLESS APPEARENCE.
7. ALL COLUMNS AND PILASTERS TO RECEIVE NEW WALL COVERING. SEE SHEET A501 FOR TYPICAL EXTENTS.
8. COLUMNS TO RECEIVE PAINT FINISH; MAINTAIN WOOD TRIM
9. SEE SPECIFICATIONS FOR FOLDING WALL FINISH
10. QUARRY TILE AT NEW CMU WALL AND COUNTER SUPPORT WALLS
11. PAINT CMU WALLS PNT1

096513 RESILIENT WALL BASE AND ACCESSORIES

VWB1
MFR: JOHNSONITE (OR APPROVED EQUAL)
SIZE: 4" COVE
COLOR: BLACK

096519 RESILIENT TILE FLOORING

VCT1
MFR: MANNINGTON COMMERCIAL
STYLE: ESSENTIALS
COLOR: FLAX 143
SIZE: 12"x12"

097200 WALL COVERINGS

VWC1
MFR: MDC
STYLE: "HYPE"
COLOR: W2HY27/4532 LEOPARD
LOCATION: BELOW CHAIR RAIL

VWC2
MFR: MDC
STYLE: "HYPE"
COLOR: W2HY31/4532 HEIRLOOM GOLD
LOCATION: ABOVE CHAIR RAIL AND BEHIND RESTROOM COUNTERS

APWC-1
MFR: NATIONAL WALLCOVERING
STYLE: "VERTICAL INTERIOR SOLUTION"
COLOR: CRYPTON VEX-09 ANGORA
LOCATION: BALCONY RAILING WALL

099123 INTERIOR PAINTING

PNT1 FIELD
MFR: SHERWIN WILLIAMS
COLOR: PRAIRIE GRASS SW7546
FINISH: EGGSHELL

PNT2 ACCENT
MFR: SHERWIN WILLIAMS
COLOR: PIER SW7545
FINISH: EGGSHELL

123623 PLASTIC-LAMINATE-CLAD COUNTERTOPS

PLAM1 COUNTERTOPS
MFR: WILSONART
SERIES: CANYON PASSAGE 1842K-45-HD

G8 ROOM FINISH SCHEDULE

SCALE: 1/4" = 1'-0"

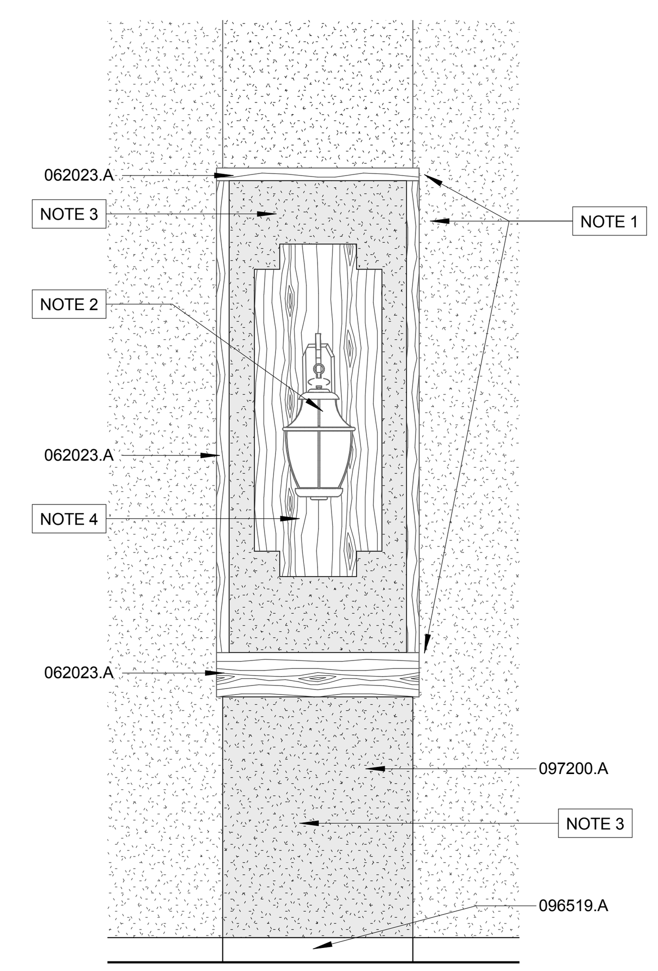

C8 ELEVATION DETAIL

SCALE: 1/2" = 1'-0"

SECOND FLOOR PILASTER

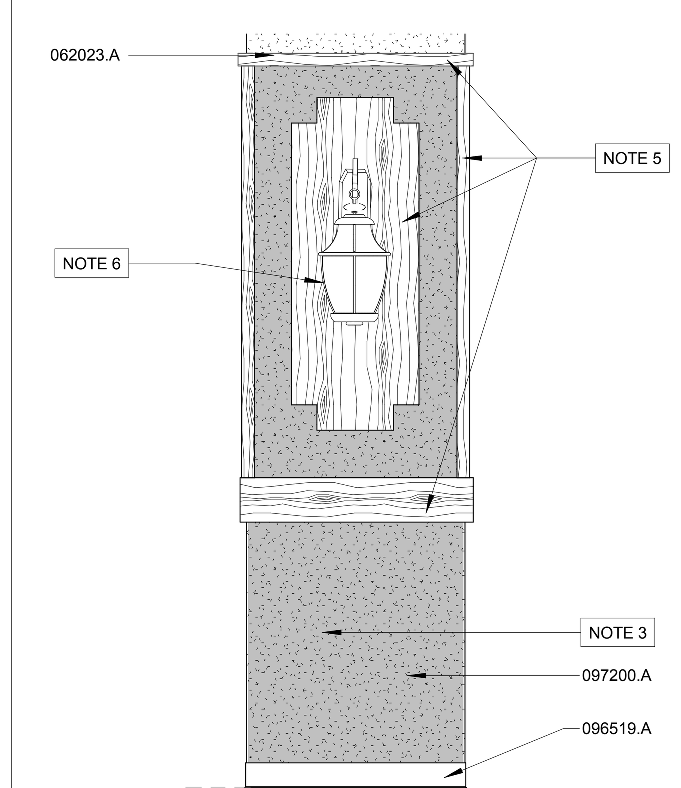

C10 ELEVATION DETAIL

SCALE: 1/2" = 1'-0"

FIRST FLOOR PILASTER

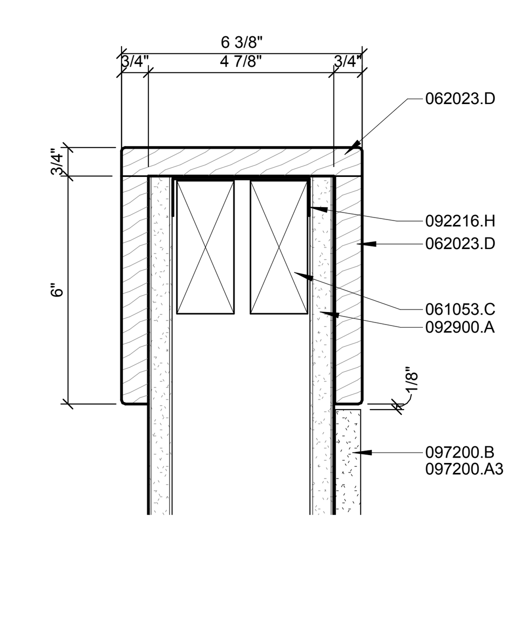

C12 TRIM DETAIL

SCALE: 3" = 1'-0"

-

SHEET A501 SHEET SPECIFIC NOTES

NOTE 1	EXISTING TRIM ON PILASTERS TO REMAIN
NOTE 2	EXISTING LIGHT FIXTURE TO REMAIN.
NOTE 3	REMOVE EXISTING WALLCOVERING TO PREPARE FOR NEW FINISHES
NOTE 4	EXISTING WOOD MILLWORK TO REMAIN.
NOTE 5	REPLACE SALVAGED MILL WORK
NOTE 6	REPLACE SALVAGED LIGHT FIXTURE

KEYNOTE LEGEND

061053.C	PROVIDE NAILER FOR WOOD TRIM
062023.A	EXISTING WOOD TRIM; RESTORE DAMAGED OR SOILED AREAS AND TOUCH-UP FINISH AS NEEDED TO ACHIEVE UNIFORM APPEARANCE.
062023.D	WOOD TRIM; RIFT-CUT RED OAK, EASE EDGES
081213.A	INTERIOR HOLLOW METAL FRAME
081416.A	SOLID CORE FLUSH SLAB WOOD DOOR
085113.A	MANUFACTURED WINDOW PANNING SYSTEM; PROVIDE NEW WOOD WINDOW BUCK TO MATCH EXISTING WINDOW PROFILES
085113.B	GLAZING UNIT
088000.A	60 MINUTE FIRE-RATED VISION LITE
092216.H	3-5/8" METAL RUNNER TRACK
092900.A	5/8" TYPE "X" GYPSUM WALLBOARD
096519.A	VINYL COMPOSITION FLOOR TILE
097200.A	SCHEDULED WALL COVERING
097200.A3	WALLCOVERING 3; WRAP SPECIFIED ACOUSTICAL BOARD
097200.B	ACOUSTICAL BOARD

REVISIONS:

DESIGN ARCHITECT: Michael P Sinclair
PROJECT ARCHITECT: Michael P Sinclair
DRAWN BY: MPS
ISSUED: 11/09/2015

ARCHITECT MICHAEL P. SINCLAIR A-4152 STATE OF NEBRASKA

PROJECT CONSULTANTS

STRUCTURAL ENGINEER
Voss & Associates, Inc
201 North 7th Street, Suite 200
Lincoln, NE 68508
402-476-6365

MECHANICAL/ELECTRICAL ENGINEERS
Olsson Associates
601 P Street, Suite 200
Lincoln, NE 68508
402-474-6311

City of Hastings

Hastings City Auditorium Interior Renovation

SINCLAIR hille architects
700 Q St. Lincoln, NE 68508 T: 402 476 7331 F: 402 476 8341

Frame Types, Door Schedule, Room Finish Schedule

SHA PROJECT NO. 15011

A501

© Copyright SINCLAIR HILLE ARCHITECTS

@	AT	IG	INSULATING GLASS
ABV	ABOVE	IG-LE	INSULATING GLASS - LOW 'E'
ADJ	ADJUSTABLE	INSUL	INSULATION
AFF	ABOVE FINISHED FLOOR	JAN	JANITOR
AL	ALUMINUM	JNT	JOINT
ANOD	ANODIZED	L	LENGTH
APC	ACOUSTICAL PANEL CEILING	LAV	LAVATORY
B.O.	BOTTOM OF	M.O.	MASONRY OPENING
BLDG	BUILDING	MAX	MAXIMUM
BLK	BLOCK	MECH	MECHANICAL
BLKHD	BULKHEAD	MEZZ	MEZZANINE
BM	BEAM	MFR	MANUFACTURER
BRG	BEARING	MFS	MORTAR FLOORING SYSTEM
BRK	BRICK	MIN	MINIMUM
BRK LDG	BRICK LEDGE	MTL	METAL
BSMT	BASEMENT	N.I.C.	NOT IN CONTRACT
CACMU	COLOR ADDED CMU	NTS	NOT TO SCALE
CAPT	CAPITAL	O.C.	ON CENTER
CJ	CONTROL OR CONTRACTION JOINT	O.D.	OUTSIDE DIAMETER
CL	CLOSET	OHD	OVERHEAD DOOR
CLG	CEILING	OPNG	OPENING
CMT	CERAMIC MOSAIC TILE	OPP HAND	OPPOSITE HAND
CMU	CONCRETE MASONRY UNIT	ORD	OVERFLOW ROOF DRAIN
COL	COLUMN	PLAM	PLASTIC LAMINATE
CONC	CONCRETE	PLAS	PLASTER
COND	CONDITION	PLYWD	PLYWOOD
CONT	CONTINUOUS	PNT	PAINT
CPT	CARPET	QT	QUARRY TILE
CRNR	CORNER	R	RADIUS
CSK	COUNTERSINK	R.O.	ROUGH OPENING
CT	CERAMIC TILE	RD	ROOF DRAIN
CW	CURTAIN WALL	REF	REFERENCE
DBL	DOUBLE	REFR	REFRIGERATOR
DF	DRINKING FOUNTAIN	REQ'D	REQUIRED
DIA	DIAMETER	REST	RESTROOM
DISP	DISPOSAL	RM	ROOM
DPR	DISPENSER	SC	SOLID CORE
DRWRS	DRAWERS	SECT	SECTION
DS	DOWNSPOUT	SF	STOREFRONT
DTL	DETAIL	SHLV	SHELVING
DW	DISHWASHER	SHT	SHEET
DWG	DRAWING	SIM	SIMILAR
EA	EACH	SJ	SOFT JOINT
EJ	EXPANSION JOINT	SRD	SECONDARY ROOF DRAIN
EL	ELEVATION	STL	STEEL
ELEC	ELECTRIC	STN	STAIN
ELEV	ELEVATOR	STOR	STORAGE
EQ	EQUAL	STRUCT	STRUCTURE
EW	EACH WAY	SV	SHEET VINYL
EWC	ELECTRIC WATER COOLER	T.O.	TOP OF
EXP STR	EXPOSED STRUCTURE	T.O.W.	TOP OF WALL
EXTG	EXISTING	THK	THICK
F.V.	FIELD VERIFY	TYP.	TYPICAL
FD	FLOOR DRAIN	U.N.O.	UNLESS NOTED OTHERWISE
FIN	FINISHED	VCT	VINYL COMPOSITION TILE
FLR	FLOOR	VERT	VERTICAL
FND	FOUNDATION	VT	VINYL TILE
FT	FULLY TEMPERED GLASS	VWB	VINYL WALL BASE
FT-AE	FT ACID ETCHED GLASS	VWC	VINYL WALL COVERING
FT-TINT	FT TINTED GLASS	W	WIDTH
GCMU	GLAZED CONCRETE MASONRY UNIT	W/	WITH
GMU	GLAZED MASONRY UNIT	W/O	WITHOUT
GWB	GYPSUM WALLBOARD OR GYPSUM BOARD	WC	WATER CLOSET
H	HEIGHT	WD	WOOD
HC	HOLLOW CORE	WDW	WINDOW
HDBD	HARDBOARD	WWF	WELDED WIRE FABRIC
HM	HOLLOW METAL		
HORIZ	HORIZONTAL		

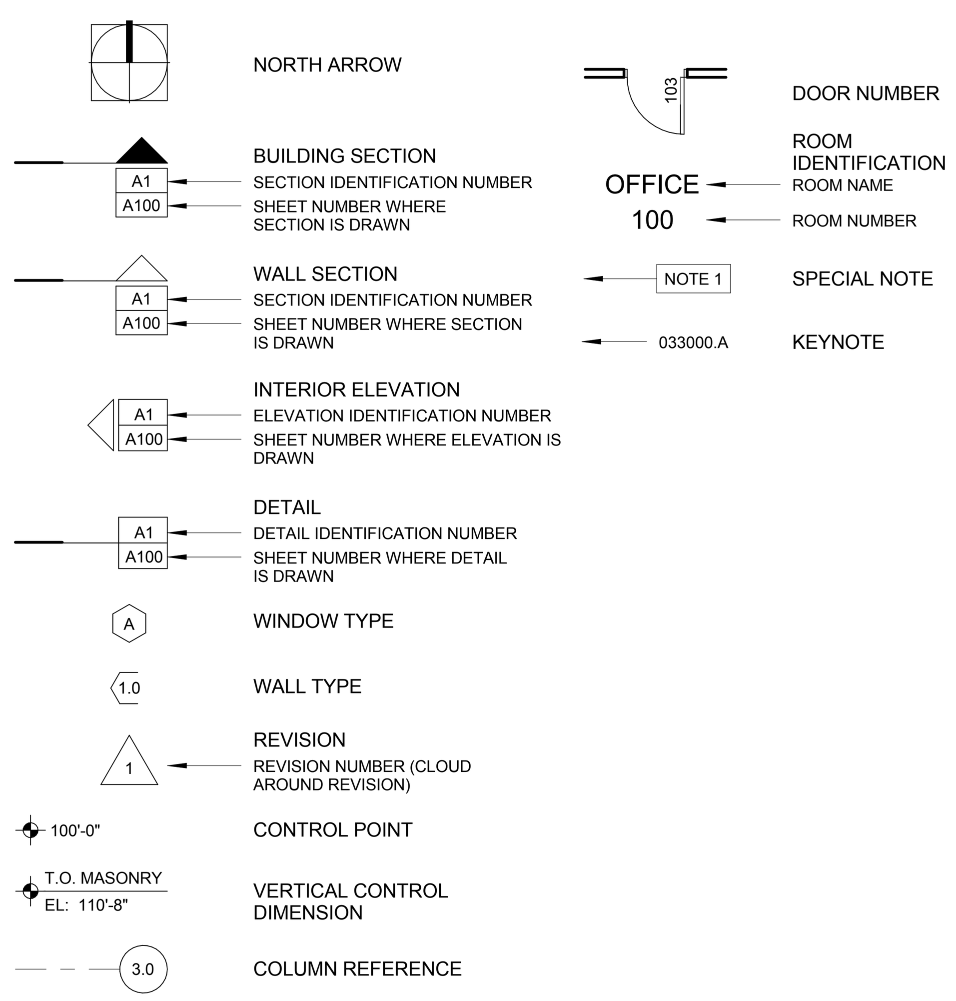

C1 SYMBOLS & ABBREVIATIONS

SCALE: 1/8" = 1'-0"

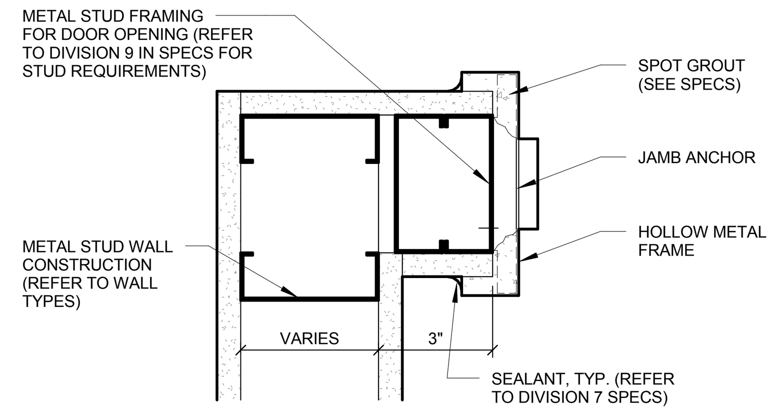

TYPICAL DOOR JAMB IN METAL STUD FRAMING

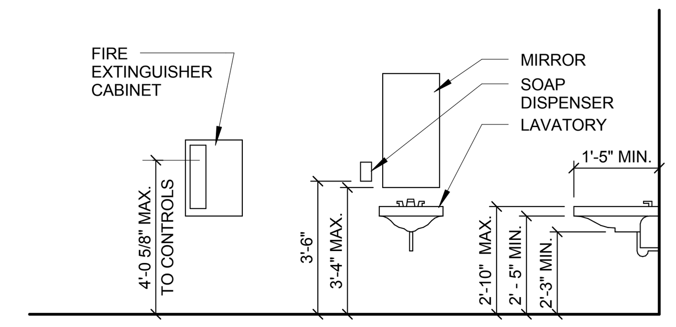

STANDARD AND ACCESSIBLE FIXTURES AND ACCESSORIES

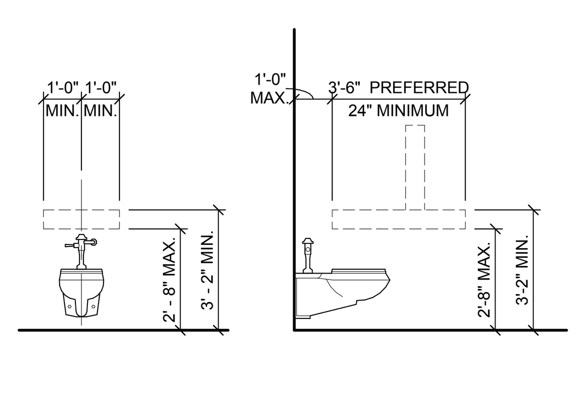

GRAB BAR REINFORCEMENT LOCATION AT WATER CLOSETS

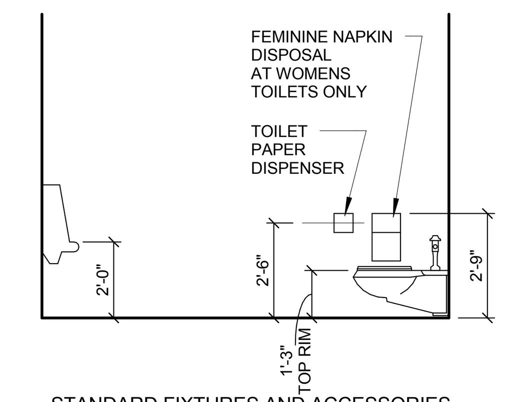

STANDARD FIXTURES AND ACCESSORIES

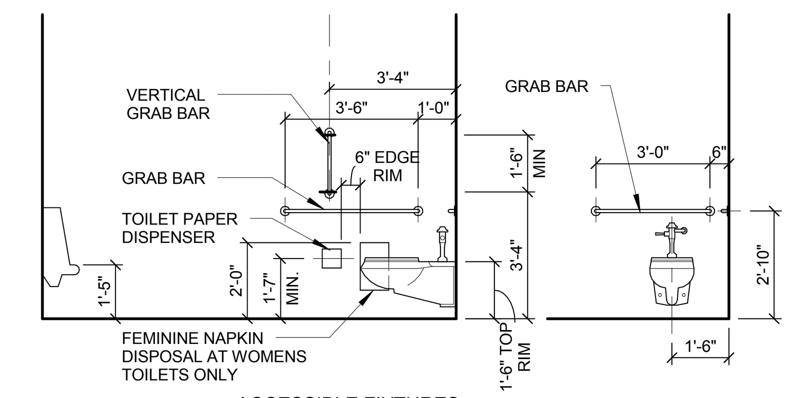

ACCESSIBLE FIXTURES AND ACCESSORIES

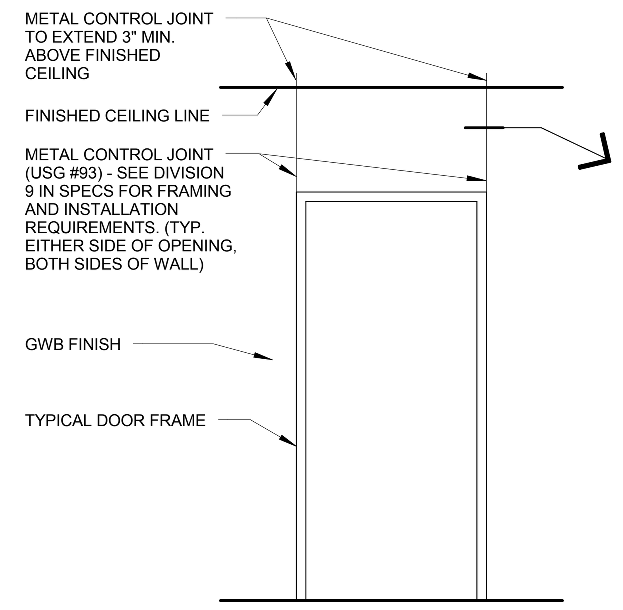

TYPICAL GWB CONTROL JOINT DETAIL AT HEAD OF DOOR OPENING

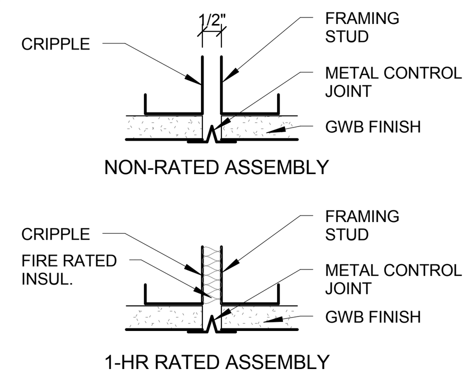

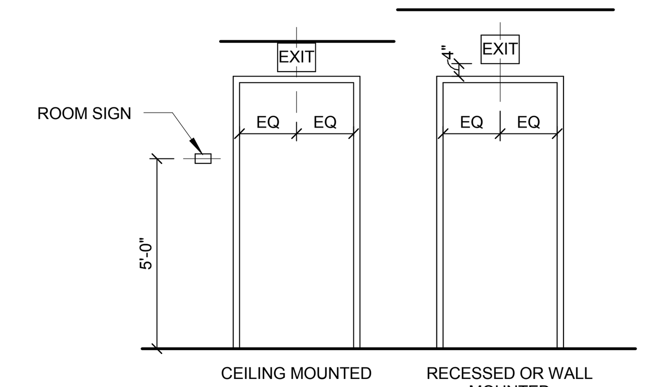

ROOM DESIGNATION AND EXIT SIGNS

ELECTRICAL SWITCHES, OUTLETS, CONTROLS AND ACCESSORIES ON WALLS OVER OBSTRUCTIONS MUST BE A MINIMUM OF 36" FROM CORNER, UNLESS OTHERWISE REQUIRED BY OTHER APPLICABLE CODES.

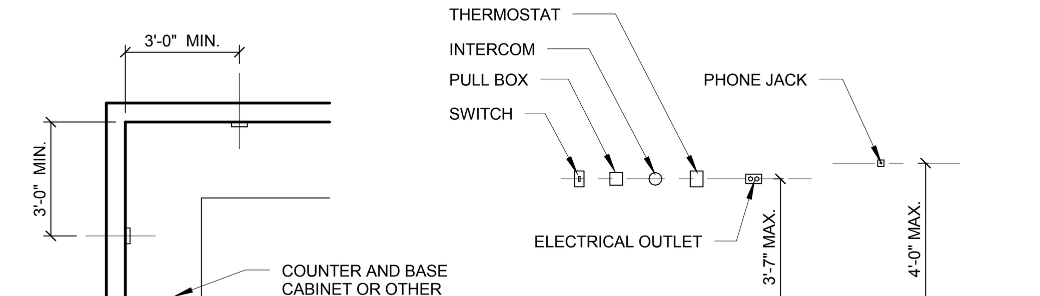

CONTACT ARCHITECT FOR ACCEPTABLE LOCATIONS OF ELECTRICAL SWITCHES , OUTLETS, AND CONTROLS ABOVE COUNTERTOPS AND OTHER OBSTRUCTIONS WHICH ARE GREATER THAN 25" IN DEPTH

STANDARD AND ACCESSIBLE SWITCHES, OUTLETS, CONTROLS AND ACCESSORIES ABOVE COUNTERTOPS AND OTHER OBSTRUCTIONS LESS THAN 25" IN DEPTH

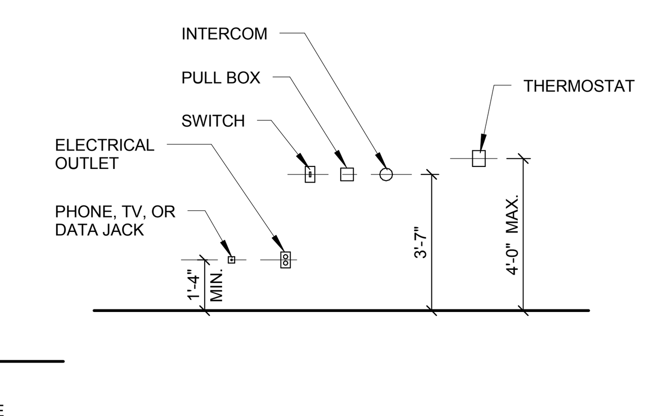

STANDARD AND ACCESSIBLE SWITCHES, OUTLETS, AND CONTROLS

H4 TYPICAL DETAILS & MOUNTING HEIGHT GUIDELINES

SCALE: 1/4" = 1'-0"

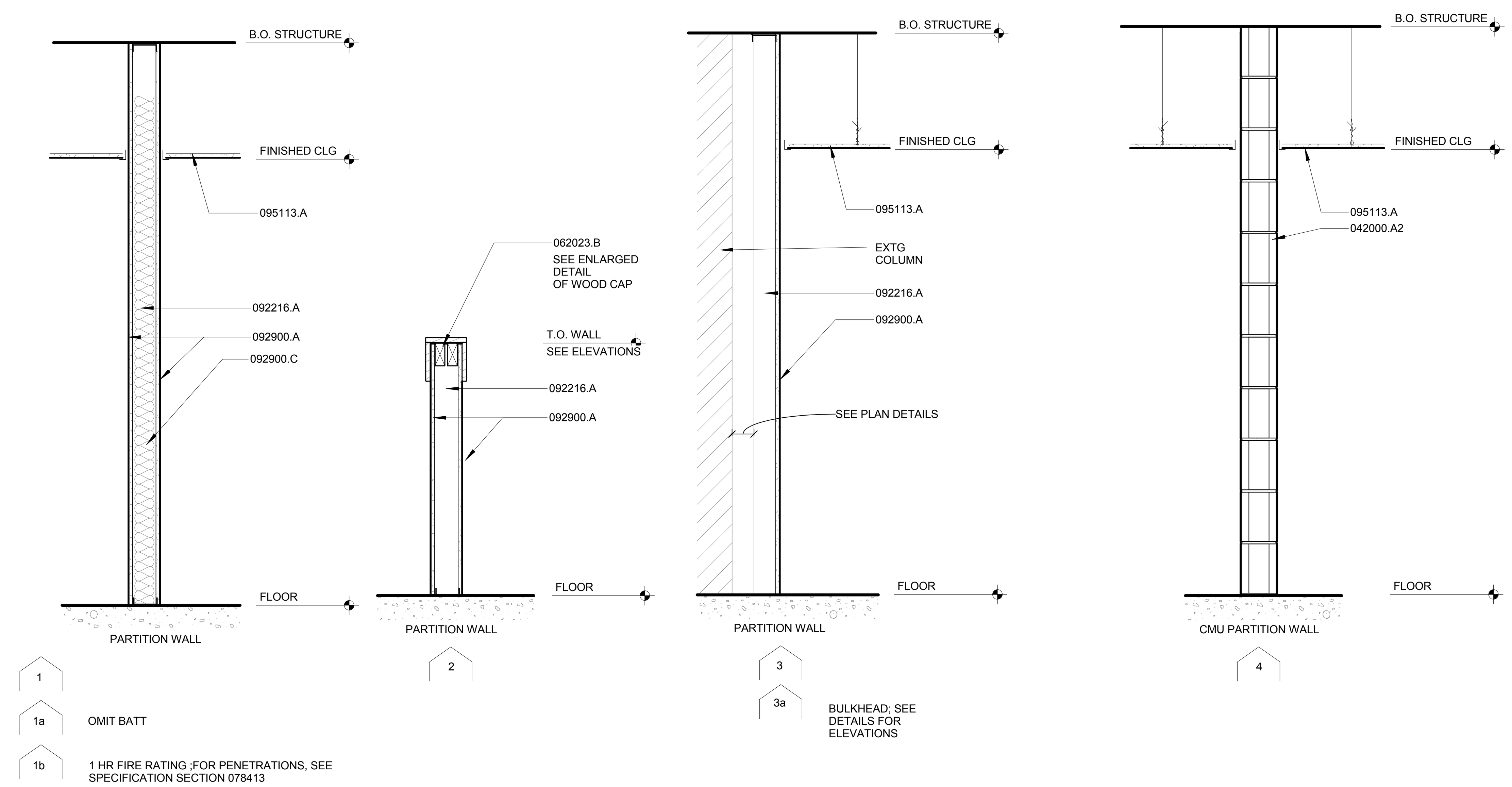

C3 WALL TYPES

SCALE: 3/4" = 1'-0"

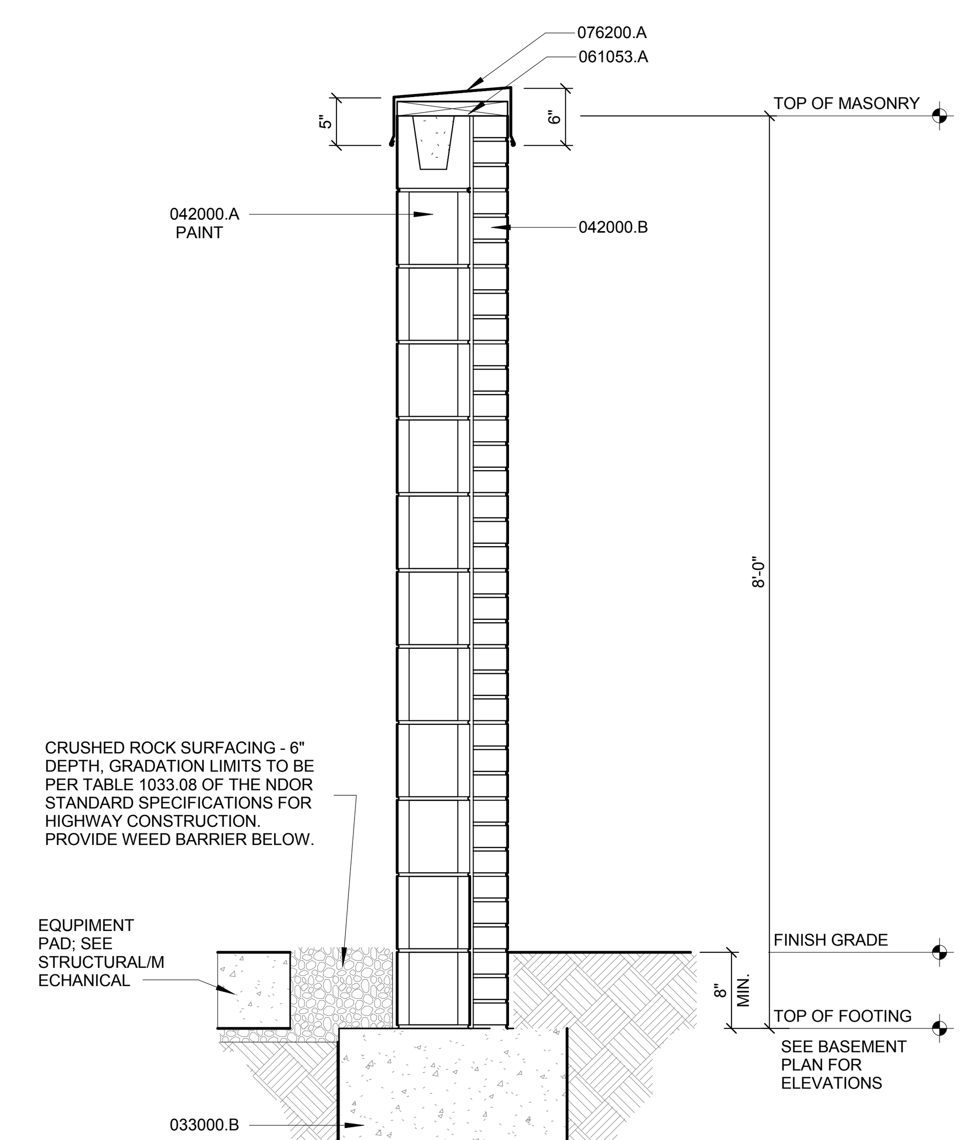

C12 SCREEN WALL

SCALE: 3/4" = 1'-0"

KEYNOTE LEGEND

033000.B	CAST CONCRETE FOOTING – SEE STRUCTURAL
042000.A	8" CMU
042000.A2	6" CMU
042000.B	BRICK VENEER
061053.A	WOOD BLOCKING
062023.B	WOOD WALL CAP; MATCH EXISTING PROFILE & FINISH
076200.A	MANUFACTURED PREFINISHED COPING SYSTEM
092216.A	3-5/8" METAL STUD
092900.A	5/8" TYPE "X" GYPSUM WALLBOARD
092900.C	SOUND ATTENUATION BLANKETS
095113.A	SUSPENDED ACOUSTICAL PANEL CEILING

GENERAL NOTES

1. ALL DIMENSIONS ARE REFERENCED FROM FACE OF FRAMING STUD, FACE OF MASONRY, FACE OF CAST-IN-PLACE CONCRETE OR FACE OF PRECAST UNLESS NOTED OTHERWISE.
2. WHERE REMOVAL OF ITEMS LEAVES A HOLE OR DAMAGED SURFACE THAT WILL BE EXPOSED IN FINISHED WORK, PATCH AND REPAIR DAMAGE TO MATCH ADJACENT FINISHED SURFACE.
3. COORDINATE WORK OF ALL OTHER TRADES WITH YOUR TRADE PRIOR TO STARTING ANY CONSTRUCTION.
4. FIELD VERIFY EXISTING CONDITIONS AND DIMENSIONS PRIOR TO COMMENCEMENT OF ANY NEW CONSTRUCTION. NOTIFY ARCHITECT IMMEDIATELY OF ANY DISCREPANCIES.
5. GENERAL CONTRACTOR SHALL BE RESPONSIBLE FOR THE COORDINATION OF THE WORK OF ALL TRADES.
6. CONSULT ARCHITECT / STRUCTURAL ENGINEER FOR ANY AND ALL LOCATIONS WHERE UNFORSEEN OR UNUSUAL STRUCTURAL CONDITIONS EXIST.
7. DO NOT SCALE DIMENSIONS FROM THESE DRAWINGS. VERIFY ALL DIMENSIONS AND REPORT ANY DISCREPANCIES TO THE ARCHITECT IMMEDIATELY.
8. PROVIDE BLOCKING IN WALLS FOR ALL BASE AND WALL CABINETS, TELEVISIONS, WALL HUNG EQUIPMENT, BATH ACCESSORIES AND WALL APPLIED DOOR HARDWARE.
9. PLUMBING / ELECTRICAL TRADES SHALL COORDINATE THEIR WORK WITH FOUNDATIONS AS REQUIRED IN MECHANICAL / ELECTRICAL SPECIFICATIONS AND NOTES. PENETRATIONS / SLEEVES SHALL BE COORDINATED WITH ARCHITECT AND STRUCTURAL ENGINEER.

REVISIONS:

DESIGN ARCHITECT: Michael P Sinclair

PROJECT ARCHITECT: Michael P. Sinclair

DRAWN BY: MPS / AMO

ISSUED: 11/09/2015

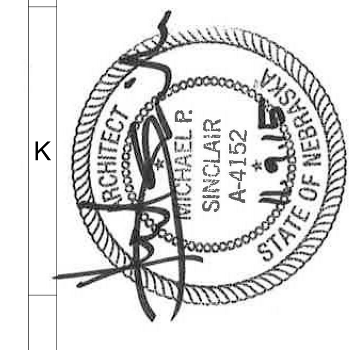

PROJECT CONSULTANTS

STRUCTURAL ENGINEER
Voss & Associates, Inc
201 North 7th Street, Suite 200
Lincoln, NE 68508
402-476-6365

MECHANICAL/ELECTRICAL ENGINEERS
Olsson Associates
601 P Street, Suite 200
Lincoln, NE 68508
402-474-6311

City of Hastings

Hastings City Auditorium Interior Renovation

SINCLAIR hille architects
700 Q St. Lincoln, NE 68508 T: 402 476 7331 F: 402 476 8341

Abbreviations, Symbols,Typical Details, Mounting Heights, Wall Types

SHA PROJECT NO. 15011

G100

© Copyright SINCLAIR HILLE ARCHITECTS

USE AND OCCUPANCY CLASSIFICATION

OCCUPANCY CLASSIFICATION

ASSEMBLY w/ STAGE	**A-3**
CONSTRUCTION TYPE:	**III-A**

REQUIREMENTS BASED ON USE AND OCCUPANCY

SECTION 410 - Stages

GENERAL BUILDING HEIGHTS AND AREAS

ALLOWABLE FLOOR AREA (Table 503)

OCCUPANCY CLASSIFICATION	A-3
ACTUAL BUILDING AREA (NOT INCLUDING BASEMENT)	**15,880 sf**
CONSTRUCTION TYPE	III-A
TABULAR ALLOWABLE AREA - A1' (Table 503)	14,000 sf
FRONTAGE INCREASE - I1' (506.2)	
Perimeter which fronts open space - 'F'	375
Perimeter of entire building - 'P'	522
Minimum width of open space - 'W'	30
Frontage increase percentage by Equation 5-2	47%
AUTO SPRINKLER INCREASE	**100%**
ALLOWABLE AREA per floor Equation 5-1 (sec. 506.1)	**34,557 sf**
ALLOWABLE AREA total Equation 5-1 (sec. 506.1)	**34,557 sf**

BUILDING HEIGHT (Table 503)

CONSTRUCTION TYPE	III-A
ALLOWABLE HEIGHT IN FEET	65
FIRE SPRINKLER INCREASE (504.2)	0
MAXIMUM HEIGHT IN FEET	**65**
ALLOWABLE STORIES	3
FIRE SPRINKLER INCREASE (504.2)	0
TOTAL ALLOWABLE STORIES	**3**

MIXED USE AND OCCUPANCY
Incidental Uses (Table 508.2)

Storage > 100 SF	1 HR
3rd Floor Workshop	1 HR

REQUIREMENTS BASED ON TYPES OF CONSTRUCTION

FIRE RESISTIVE REQUIREMENTS (Table 601)

STRUCTURAL FRAME	1 HR
EXTERIOR BEARING WALLS	1 HR
INTERIOR BEARING WALLS	1 HR
EXTERIOR NON-BEARING WALLS	1 HR
INTERIOR NON-BEARING WALLS	0 HR
FLOOR CONSTRUCTION	1 HR
ROOF CONSTRUCTION	1 HR

FIRE RESISTANCE EXTERIOR WALLS (Table 602)

FIRE SEPARATION IS BETWEEN 10 AND 30 FT	1 HR AT NORTH WALL

FIRE PROTECTION SYSTEMS

BUILDING ISPARTIALLY SPRINKLED (Stage)

REQUIREMENTS BASED ON MEANS OF EGRESS

OCCUPANT LOADS (Section 1004)

ACTIVITY USES	AREA	SQ. FT / OCCUPANT (1004.1.1)	# OF OCC
Basement - Accessory	3180 sf	300	11
Ground Floor - Assembly / Unconcentrated	6990 sf	7	998
Ground Floor - Ancillary	1560 sf		
Balcony - Assembly / fixed seating	6810 sf	8	828
		TOTAL OCCUPANTS	1837

G1 CODE SUMMARY

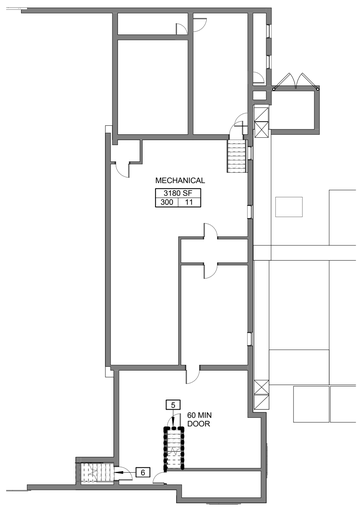

G5 BASEMENT PLAN

SCALE: 1/16" = 1'-0"

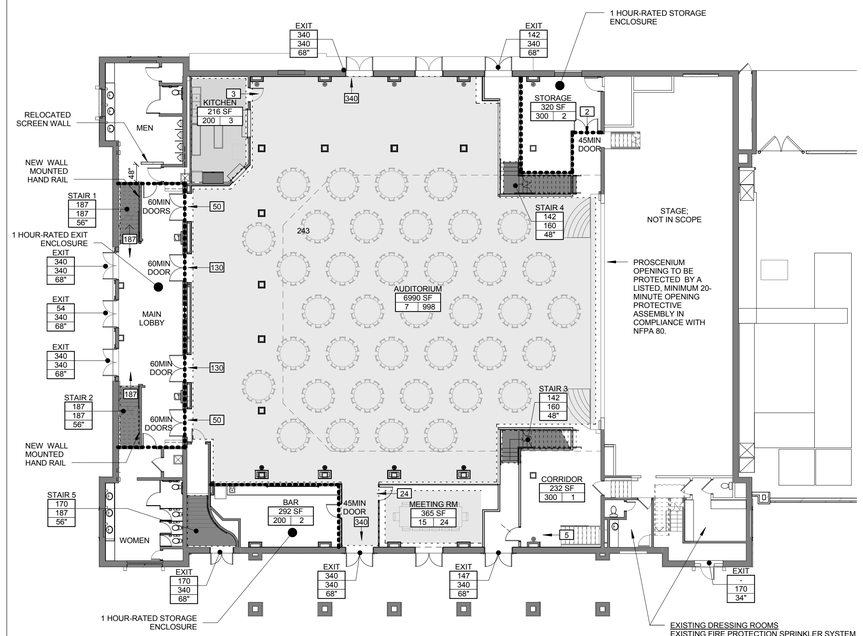

G7 FIRST FLOOR CODE PLAN

SCALE: 1/16" = 1'-0"

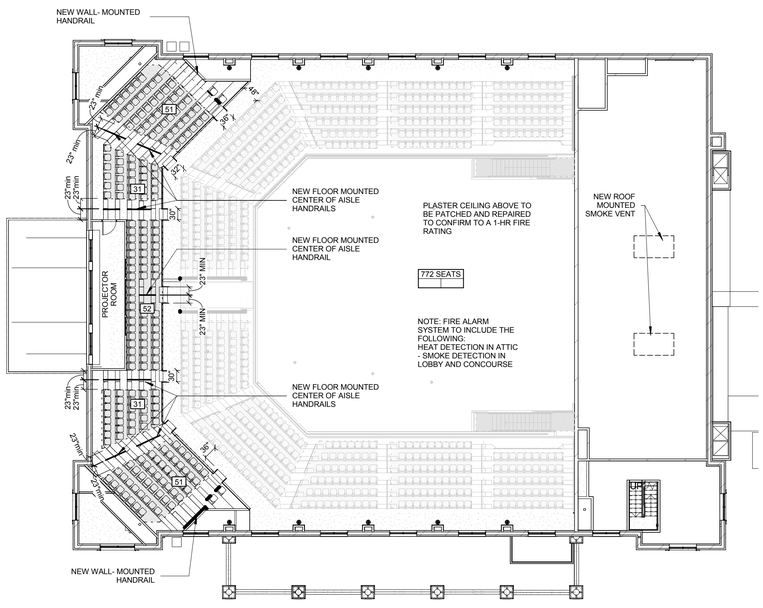

A1 UPPER BALCONY CODE PLAN

SCALE: 1/16" = 1'-0"

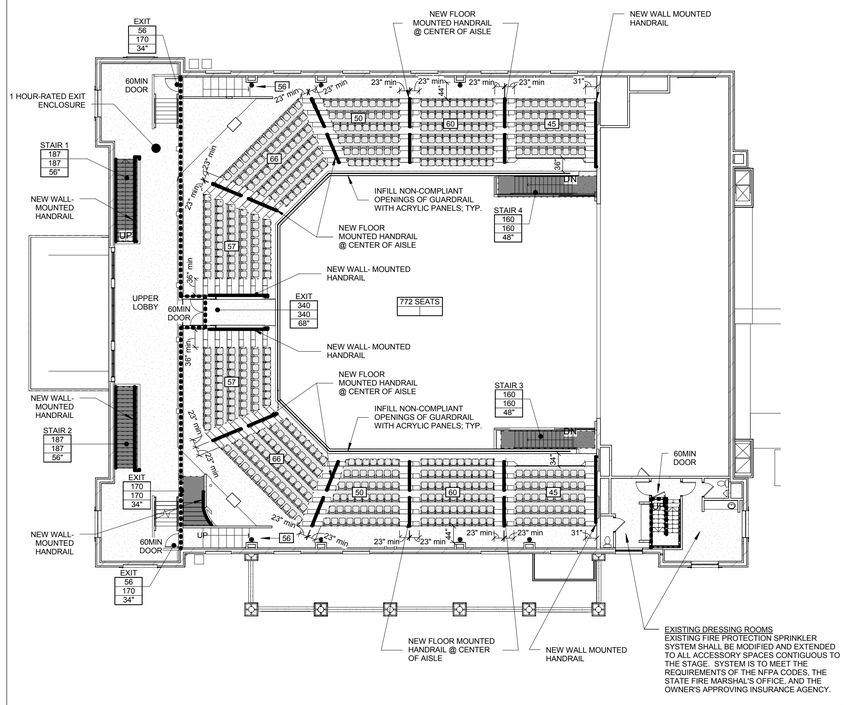

A7 LOWER BALCONY CODE PLAN

SCALE: 1/16" = 1'-0"

REVISIONS:

DESIGN ARCHITECT: Michael P. Sinclair
PROJECT ARCHITECT: Michael P. Sinclair
DRAWN BY: MPS
ISSUED: 11/09/2015

PROJECT CONSULTANTS

STRUCTURAL ENGINEER
Voss & Associates, Inc
201 North 8th Street, Suite 200
Lincoln, NE 68508
402-476-6564

MECHANICAL/ELECTRICAL ENGINEERS
Olsson Associates
601 P Street, Suite 200
Lincoln, NE 68508
402-474-6311

City of Hastings

Hastings City Auditorium Interior Renovation

SINCLAIR hille architects
700 Q St. Lincoln, NE 68508 T: 402 476 7331 F: 402 476 8341

Code Summary & Life Safety Plans

SHA PROJECT NO. 15011

LS100

© Copyright SINCLAIR HILLE ARCHITECTS

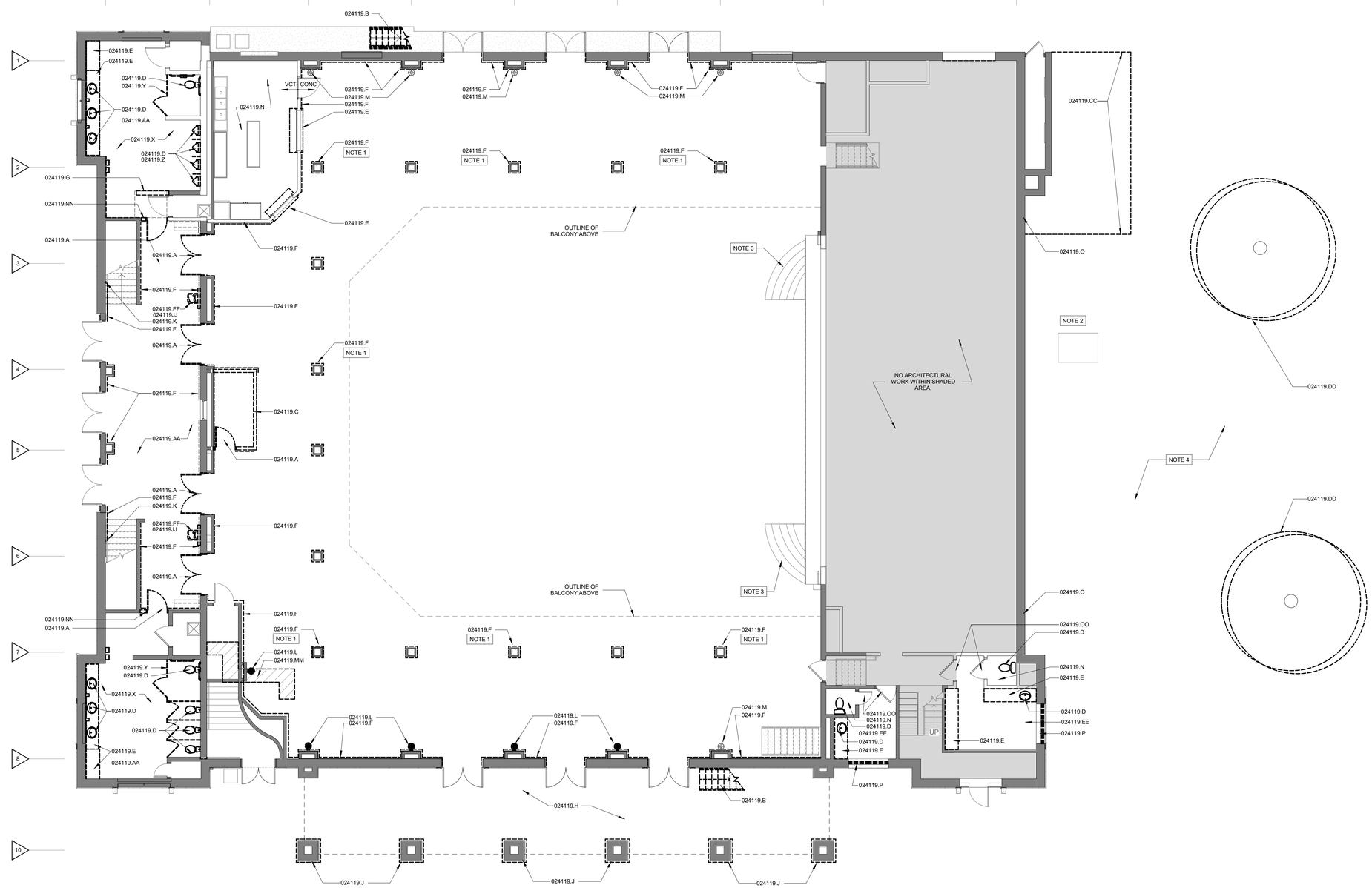

C1 FIRST FLOOR DEMOLITION PLAN - EXISTING AUDITORIUM

SCALE: 1/8" = 1'-0"

GENERAL DEMOLITION NOTES

1. THE EXISTING INFORMATION SHOWN ON THE DRAWINGS IS AS EXACT AS COULD BE SECURED INSOFAR AS BUILDING CONSTRUCTION AND EXISTING CONDITIONS ARE CONCERNED. EXTREME ACCURACY IS NOT GUARANTEED. THE DRAWINGS AND SPECIFICATIONS ARE INTENDED FOR THE ASSISTANCE OF THE CONTRACTOR IN ACHIEVING THE END RESULTS. MANY OF THE DIMENSIONS AND CONDITIONS NOTED ON THE DRAWINGS ARE BASED ON INFORMATION OBTAINED FROM THE ORIGINAL DRAWINGS AND MAY OR MAY NOT BE CORRECT. EXACT LOCATIONS, MEASUREMENTS, DISTANCES, LEVELS, ETC. WILL BE GOVERNED BY CONDITIONS AT THE JOB SITE. THE CONTRACTOR SHALL FIELD VERIFY ALL EXISTING CONDITIONS AND DIMENSIONS WHICH AFFECT WORK TO BE PERFORMED AS PART OF THIS PROJECT PRIOR TO ANY NEW CONSTRUCTION OR MATERIAL FABRICATION. ALL DIMENSIONS MUST BE FIELD VERIFIED AND SHOWN ON THE SHOP DRAWINGS OR ON A SEPARATE SUBMITTAL SO ADJUSTMENTS TO DETAILS CAN BE CONSIDERED. THE CONTRACTOR WILL BE RESPONSIBLE FOR ALL CONSTRUCTION CHANGES WHICH ARE A RESULT OF EXISTING JOB SITE CONDITIONS, AND WHICH ARE NOT ACCURATELY DOCUMENTED FOR THE OWNER IMMEDIATELY AFTER THE CONTRACTOR'S FIELD VERIFICATION EFFORTS.
2. REFER TO FLOOR PLANS FOR NEW CONSTRUCTION REQUIREMENTS. COORDINATE ALL DEMOLITION WORK WITH ALL NEW CONSTRUCTION INDICATED.

GENERAL DEMOLITION NOTES

3. ALL BOLD, DASHED LINES INDICATE EXISTING CONSTRUCTION TO BE REMOVED UNLESS NOTED OTHERWISE.
4. THESE PLANS INDICATE MAJOR ITEMS OF DEMOLITION IN THE PROJECT AND ARE NOT INTENDED TO INDICATE ALL DEMOLITION REQUIRED TO COMPLETE THE WORK. ADDITIONAL DEMOLITION MAY BE REQUIRED OF THE CONTRACTOR IN ORDER TO COMPLETE NEW CONSTRUCTION.
5. CONTRACTOR IS TO PROVIDE OPENINGS IN WALLS AS REQUIRED BY ANY NEW DUCTWORK, CONDUIT OR OTHER UTILITIES. REFER TO MECHANICAL AND ELECTRICAL PLANS FOR SIZE AND LOCATION OF POTENTIAL OPENINGS NOT SPECIFICIALLY INDICATED AS PART OF THE DEMOLITION DRAWINGS.
6. CONTRACTOR SHALL FILL ALL OPENINGS IN EXISTING FLOOR SLABS, WALLS AND CEILINGS LEFT BY THE REMOVAL OF EXISTING DUCTWORK, CONDUIT AND OTHER UTILITIES. FILL HOLES SO AS TO MATCH THE EXISTING ADJACENT CONSTRUCTION MATERIALS AND FINISHES. CONTRACTOR TO FIELD VERIFY THE SIZE, NUMBER AND LOCATION OF THESE OPENINGS.
7. REFER TO MECHANICAL, ELECTRICAL, STRUCTURAL AND CIVIL SHEETS FOR ADDITIONAL DEMOLITION SCOPE RELATING TO THOSE SPECIFIC TRADES.
8. REPAIR OR REPLACE ANY EXISTING CONSTRUCTION AND FINISHES SCHEDULED TO REMAIN WHICH ARE DAMAGED DURING DEMOLITION OPERATIONS. DAMAGED CONSTRUCTION AND FINISHES SCHEDULED TO REMAIN SHALL BE REPAIRED OR REPLACED TO MATCH EXISTING ADJACENT CONSTRUCTION.

GENERAL DEMOLITION NOTES

9. UNLESS NOTED OTHERWISE, WHERE EXISTING FIXTURES, ASSEMBLIES OR EQUIPMENT ARE REMOVED, REMOVE AND CAP ASSOCIATED SERVICES IN A CONCEALED LOCATION AND AS REQUIRED FOR NEW WORK. REMOVE (OR REMOVE AND SALVAGE) ASSOCIATED CARRIERS AND MOUNTING DEVICES AS REQUIRED FOR REINSTALLATION OR NEW WORK. REFER TO AND COORDINATE WITH MECHANICAL AND ELECTRICAL.
10. SAW CUTTING OF CONCRETE BEYOND THE DIMENSIONS OF THE PLANNED OPENING IS PROHIBITED.
11. DEMOLITION DRAWINGS ONLY INDICATE PRIMARY DEMOLITION WORK. ALL ADDITIONAL INCIDENTAL DEMOLITION REQUIRED TO COMPLETE WORK IS TO BE INCLUDED AS PART OF THE OVERALL DEMOLITION EFFORT WITH NO ADDITIONAL COSTS BEING ASSESSED TO THE OWNER.
12. REPAIR AND PREPARE ALL EXISTING SURFACES ADJACENT TO DEMOLITION ITEMS AS REQUIRED TO RECEIVE NEW FINISHES.
13. THE OWNER RETAINS THE FIRST RIGHT OF SALVAGE FOR ALL ASSEMBLIES AND EQUIPMENT. IF OWNER DECLINES, THE CONTRACTOR SHALL REMOVE ITEMS FROM THE PREMISES AND DISPOSE OF PROPRLY. VERIFY OWNER'S INTENT PRIOR TO REMOVAL OR DEMOLITION.
14. REMOVE AND SALVAGE MOUNTED ITEMS AS REQUIRED BY THE WORK. REINSTALL UNLESS DIRECTED OTHERWISE BY OWNER.

GENERAL DEMOLITION NOTES

15. COORDINATE RELOCATION AND STORAGE OF ANY EXISTING FURNISHINGS & EQUIPMENT (SHOWN AND NOT SHOWN) WITH OWNER PRIOR TO COMMENCEMENT OF DEMOLITION ACTIVITIES
16. MASONRY DEMOLITION SHALL ACCOMMODATE MATCHING EXISTING BOND PATTERNS.
17. ALL EXISTING MOVEABLE FURNISHINGS WILL BE REMOVED BY THE OWNER AS NEEDED FOR CONTRACTOR TO COMPLETE THE WORK. CONTRACTOR TO COORDINATE WITH OWNER. SCHEDULE FOR REMOVAL AND REINSTALLATION.
18. PATCH AND REPAIR EXISTING WALL FINISHES WHERE REMOVAL OF EXISTING HANDRAILS AND GUARDRAILS OCCUR.

SHEET AD101 SHEET SPECIFIC NOTES

NOTE 1	TYPICAL AT ALL COLUMNS AND PILASTERS WITHIN AUDITORIUM BOWL
NOTE 2	ELECTRICAL TRANSFORMER: EXISTING TO REMAIN
NOTE 3	MOVABLE RISERS; EXISTING TO REMAIN. PROTECT DURING DURATION OF CONSTRUCTION. SEE FINISH SCHEDULE FOR NEW FINISHES.
NOTE 4	COORDINATE RELOCATION OF LAWN IRRIGATION LINES WITH OWNER

KEYNOTE LEGEND

024119.A	REMOVE DOOR, FRAME, AND ALL ASSOCIATED HARDWARE.
024119.AA	REMOVE LAY-IN CEILING IN ITS ENTIRETY
024119.B	DISMANTLE EXTERIOR FIRE ESCAPE ASSEMBLY , INCLUDING RAILINGS AND LANDINGS, IN ITS ENTIRETY
024119.C	REMOVE WALL ASSEMBLY IN ITS ENTIRETY
024119.CC	REMOVE TRASH ENCLOSURE IN ITS ENTIRETY
024119.D	REMOVE AND SALVAGE PLUMBING FIXTURES.
024119.DD	TREE TO BE REMOVED; COORDINATE WITH OWNER
024119.E	REMOVE COUNTERTOP
024119.EE	REMOVE CARPETING AND WALL BASE
024119.F	REMOVE WALL COVERING; SKIM COAT AND PREPARE FOR NEW FINISH AS SCHEDULED
024119.FF	REMOVE DRINKING FOUNTAIN
024119.G	REMOVE WALL TO EXTENT SHOWN. SEE NEW PLAN FOR REQUIRED CLEARANCES
024119.H	REMOVE PLASTERWORK FROM UNDERSIDE OF PORTICO ROOF AND BEAMS
024119.J	REMOVE DAMAGED PORTION OF CONCRETE BASE AS REQUIRED TO ACCOMMODATE INFILL AND REPAIR
024119.K	REMOVE AND REINSTALL WOOD BATTEN STRIP SERVING AS WALLCOVERING TERMINATION.

KEYNOTE LEGEND

024119.L	REMOVE AND REINSTALL WALL SCONCE AND WOOD PANEL BACKING AS INDICATED ON NEW CONSTRUCTION PLAN
024119.M	REMOVE AND REINSTALL WALL SCONCE AND WOOD PANEL BACKING AS REQUIRED FOR INSTALLATION OF NEW SCHEDULED FINISHES.
024119.MM	REMOVE EXISTING FLOORING AS REQUIRED FOR INSTALLATION OF NEW FLOOR DRAIN AS SHOWN ON PLUMBING DRAWINGS. PATCH AND REPAIR AS REQUIRED TO MATCH SURROUNDING CONDITIONS
024119.N	REMOVE VINYL TILE FLOORING. SEE FINISH SCHEDULE FOR REQUIRED FLOOR PREP PRIOR TO INSTALL OF NEW FLOORING
024119.NN	CUT OPENING AS REQUIRED FOR SCHEDULED OPENING
024119.O	COORDINATE NEW HVAC PENETRATIONS WITH MECHANICAL
024119.OO	REMOVE DOOR HANDLESET AS REQUIRED FOR NEW SCHEDULED HARDWARE
024119.P	REMOVE GLAZING AND SASH AS REQUIRED FOR NEW SCHEDULED WINDOW PANNING SYSTEM
024119.X	REMOVE ALL WALL-MOUNTED TOILET ACCESSORIES
024119.Y	REMOVE AND SALVAGE TOILET PARTITION AND ALL ASSOCIATED HARDWARE
024119.Z	REMOVE AND SALVAGE URINAL SCREEN AND ALL ASSOCIATED HARDWARE
024119JJ	

REVISIONS:

DESIGN ARCHITECT: Michael P Sinclair
PROJECT ARCHITECT: Michael P Sinclair
DRAWN BY: MPS / AMO
ISSUED: 11/09/2015

ARCHITECT MICHAEL P SINCLAIR A-4152 STATE OF NEBRASKA

PROJECT CONSULTANTS

STRUCTURAL ENGINEER
Voss & Associates, Inc
201 North 8th Street, Suite 200
Lincoln, NE 68508
402-476-6064

MECHANICAL/ELECTRICAL ENGINEERS
Olsson Associates
601 P Street, Suite 200
Lincoln, NE 68508
402-474-6311

City of Hastings

Hastings City Auditorium Interior Renovation

SINCLAIR hille architects
700 Q St. Lincoln, NE 68508 T: 402 476 7331 F: 402 476 8341

First Floor Level Demolition Plan

SHA PROJECT NO. 15011

AD101

© Copyright SINCLAIR HILLE ARCHITECTS

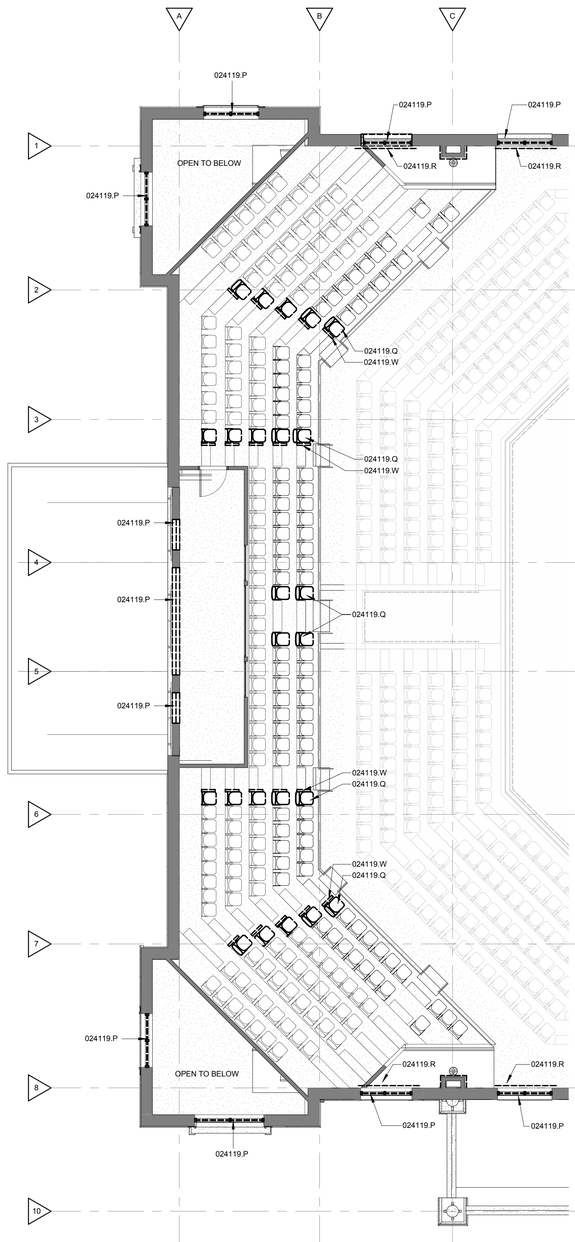

C1 UPPER BOWL DEMOLITION PLAN

SCALE: 1/8" = 1'-0"

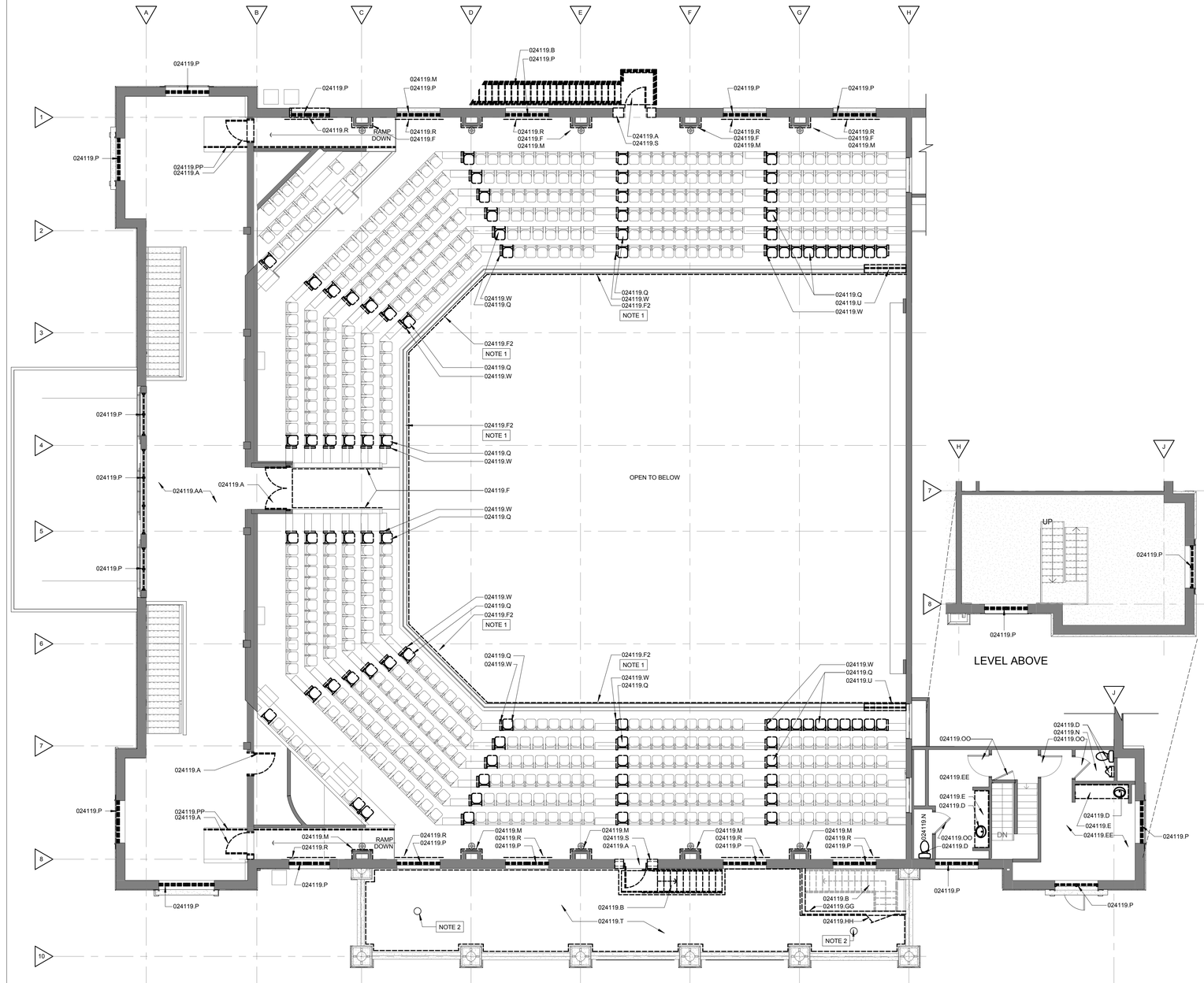

C5 BALCONY DEMOLITION PLAN

SCALE: 1/8" = 1'-0"

GENERAL DEMOLITION NOTES

1. THE EXISTING INFORMATION SHOWN ON THE DRAWINGS IS AS EXACT AS COULD BE SECURED INSOFAR AS BUILDING CONSTRUCTION AND EXISTING CONDITIONS ARE CONCERNED. EXTREME ACCURACY IS NOT GUARANTEED. THE DRAWINGS AND SPECIFICATIONS ARE INTENDED FOR THE ASSISTANCE OF THE CONTRACTOR IN ACHIEVING THE END RESULTS. MANY OF THE DIMENSIONS AND CONDITIONS NOTED ON THE DRAWINGS ARE BASED ON INFORMATION OBTAINED FROM THE ORIGINAL DRAWINGS AND MAY OR MAY NOT BE CORRECT. EXACT LOCATIONS, MEASUREMENTS, DISTANCES, LEVELS, ETC. WILL BE GOVERNED BY CONDITIONS AT THE JOB SITE. THE CONTRACTOR SHALL FIELD VERIFY ALL EXISTING CONDITIONS AND DIMENSIONS WHICH AFFECT WORK TO BE PERFORMED AS PART OF THIS PROJECT PRIOR TO ANY NEW CONSTRUCTION OR MATERIAL FABRICATION. ALL DIMENSIONS MUST BE FIELD VERIFIED AND SHOWN ON THE SHOP DRAWINGS OR ON A SEPARATE SUBMITTAL SO ADJUSTMENTS TO DETAILS CAN BE CONSIDERED. THE CONTRACTOR WILL BE RESPONSIBLE FOR ALL CONSTRUCTION CHANGES WHICH ARE A RESULT OF EXISTING JOB SITE CONDITIONS, AND WHICH ARE NOT ACCURATELY DOCUMENTED FOR THE OWNER IMMEDIATELY AFTER THE CONTRACTOR'S FIELD VERIFICATION EFFORTS.
2. REFER TO FLOOR PLANS FOR NEW CONSTRUCTION REQUIREMENTS. COORDINATE ALL DEMOLITION WORK WITH ALL NEW CONSTRUCTION INDICATED.

GENERAL DEMOLITION NOTES

3. ALL BOLD, DASHED LINES INDICATE EXISTING CONSTRUCTION TO BE REMOVED UNLESS NOTED OTHERWISE.
4. THESE PLANS INDICATE MAJOR ITEMS OF DEMOLITION IN THE PROJECT AND ARE NOT INTENDED TO INDICATE ALL DEMOLITION REQUIRED TO COMPLETE THE WORK. ADDITIONAL DEMOLITION MAY BE REQUIRED OF THE CONTRACTOR IN ORDER TO COMPLETE NEW CONSTRUCTION.
5. CONTRACTOR IS TO PROVIDE OPENINGS IN WALLS AS REQUIRED BY ANY NEW DUCTWORK, CONDUIT OR OTHER UTILITIES. REFER TO MECHANICAL AND ELECTRICAL PLANS FOR SIZE AND LOCATION OF POTENTIAL OPENINGS NOT SPECIFICALLY INDICATED AS PART OF THE DEMOLITION DRAWINGS.
6. CONTRACTOR SHALL FILL ALL OPENINGS IN EXISTING FLOOR SLABS, WALLS AND CEILINGS LEFT BY THE REMOVAL OF EXISTING DUCTWORK, CONDUIT AND OTHER UTILITIES. FILL HOLES SO AS TO MATCH THE EXISTING ADJACENT CONSTRUCTION MATERIALS AND FINISHES. CONTRACTOR TO FIELD VERIFY THE SIZE, NUMBER AND LOCATION OF THESE OPENINGS.
7. REFER TO MECHANICAL, ELECTRICAL, STRUCTURAL AND CIVIL SHEETS FOR ADDITIONAL DEMOLITION SCOPE RELATING TO THOSE SPECIFIC TRADES.
8. REPAIR OR REPLACE ANY EXISTING CONSTRUCTION AND FINISHES SCHEDULED TO REMAIN WHICH ARE DAMAGED DURING DEMOLITION OPERATIONS. DAMAGED CONSTRUCTION AND FINISHES SCHEDULED TO REMAIN SHALL BE REPAIRED OR REPLACED TO MATCH EXISTING ADJACENT CONSTRUCTION.

GENERAL DEMOLITION NOTES

9. UNLESS NOTED OTHERWISE, WHERE EXISTING FIXTURES, ASSEMBLIES OR EQUIPMENT ARE REMOVED, REMOVE AND CAP ASSOCIATED SERVICES IN A CONCEALED LOCATION AND AS REQUIRED FOR NEW WORK. REMOVE (OR REMOVE AND SALVAGE) ASSOCIATED CARRIERS AND MOUNTING DEVICES AS REQUIRED FOR REINSTALLATION OR NEW WORK. REFER TO AND COORDINATE WITH MECHANICAL AND ELECTRICAL.
10. SAW CUTTING OF CONCRETE BEYOND THE DIMENSIONS OF THE PLANNED OPENING IS PROHIBITED.
11. DEMOLITION DRAWINGS ONLY INDICATE PRIMARY DEMOLITION WORK. ALL ADDITIONAL INCIDENTAL DEMOLITION REQUIRED TO COMPLETE WORK IS TO BE INCLUDED AS PART OF THE OVERALL DEMOLITION EFFORT WITH NO ADDITIONAL COSTS BEING ASSESSED TO THE OWNER.
12. REPAIR AND PREPARE ALL EXISTING SURFACES ADJACENT TO DEMOLITION ITEMS AS REQUIRED TO RECEIVE NEW FINISHES.
13. THE OWNER RETAINS THE FIRST RIGHT OF SALVAGE FOR ALL ASSEMBLIES AND EQUIPMENT. IF OWNER DECLINES, THE CONTRACTOR SHALL REMOVE ITEMS FROM THE PREMISES AND DISPOSE OF PROPRLY. VERIFY OWNER'S INTENT PRIOR TO REMOVAL OR DEMOLITION.
14. REMOVE AND SALVAGE MOUNTED ITEMS AS REQUIRED BY THE WORK. REINSTALL UNLESS DIRECTED OTHERWISE BY OWNER.

GENERAL DEMOLITION NOTES

15. COORDINATE RELOCATION AND STORAGE OF ANY EXISTING FURNISHINGS & EQUIPMENT (SHOWN AND NOT SHOWN) WITH OWNER PRIOR TO COMMENCEMENT OF DEMOLITION ACTIVITIES
16. MASONRY DEMOLITION SHALL ACCOMMODATE MATCHING EXISTING BOND PATTERNS.
17. ALL EXISTING MOVEABLE FURNISHINGS WILL BE REMOVED BY THE OWNER AS NEEDED FOR CONTRACTOR TO COMPLETE THE WORK. CONTRACTOR TO COORDINATE WITH OWNER, SCHEDULE FOR REMOVAL AND REINSTALLATION.
18. PATCH AND REPAIR EXISTING WALL FINISHES WHERE REMOVAL OF EXISTING HANDRAILS AND GUARDRAILS OCCUR.

SHEET AD102 SHEET SPECIFIC NOTES

NOTE 1 SEE ELEVATIONS - FOR REMOVAL OF FINISHES AND THEIR EXTENT.

NOTE 2 ROOF DRAIN; EXISTING TO REMAIN

KEYNOTE LEGEND

024119.A	REMOVE DOOR, FRAME, AND ALL ASSOCIATED HARDWARE.
024119.AA	REMOVE LAY-IN CEILING IN ITS ENTIRETY
024119.B	DISMANTLE EXTERIOR FIRE ESCAPE ASSEMBLY INCLUDING RAILINGS AND LANDINGS, IN ITS ENTIRETY
024119.D	REMOVE AND SALVAGE PLUMBING FIXTURES.
024119.E	REMOVE COUNTERTOP
024119.EE	REMOVE CARPETING AND WALL BASE
024119.F	REMOVE WALL COVERING; SKIM COAT AND PREPARE FOR NEW FINISH AS SCHEDULED
024119.F2	REMOVE WALL COVERING; WALL TO RECEIVE ACOUSTICAL PANEL AS SCHEDULED
024119.GG	REMOVE GUTTER; EXISTING DOWNSPOUT TO REMAIN
024119.HH	REMOVE CHAINLINK GATE AND ENCLOSURE
024119.M	REMOVE AND REINSTALL WALL SCONCE AND WOOD PANEL BACKING AS REQUIRED FOR INSTALLATION OF NEW SCHEDULED FINISHES.

KEYNOTE LEGEND

024119.N	REMOVE VINYL TILE FLOORING. SEE FINISH SCHEDULE FOR REQUIRED FLOOR PREP PRIOR TO INSTALL OF NEW FLOORING
024119.OO	REMOVE DOOR HANDLESET AS REQUIRED FOR NEW SCHEDULED HARDWARE
024119.P	REMOVE GLAZING AND SASH AS REQUIRED FOR NEW SCHEDULED WINDOW PANNING SYSTEM
024119.PP	REMOVE HANDRAIL IN ITS ENTIRETY
024119.Q	REMOVE AND SALVAGE SEATS AS REQUIRED TO ACCOMMODATRE NEW CONSTRUCTION PLAN SHOWN; RETURN TO OWNERS STOCK.
024119.R	REMOVE FABRIC VALANCES AND ROLLER BLINDS
024119.S	SAW-CUT MASONRY OPENING AS REQUIRED FOR INSTALLATION OF NEW SCHEDULED OPENING
024119.T	REMOVE EPDM MEMBRANE ROOFING ASSEMBLY IN ITS ENTIRTY
024119.U	REMOVE EXTENT OF RAILING AND LOWER BALCONY WALL AS REQUIRED FOR ATTACHMENT OF NEW STEEL PAN STAIR LANDING
024119.W	REMOVE AND SALVAGE AISLE END PANEL; REINSTALL PER NEW LAYOUT. SEE ELECTRICAL FOR POWER AND LIGHTING MODIFICATIONS

REVISIONS:	
DESIGN ARCHITECT: MPS	
PROJECT ARCHITECT: MPS	
DRAWN BY: MPS	
ISSUED: 11/09/2015	

ARCHITECT MICHAEL P. SINCLAIR A-4152 STATE OF NEBRASKA

PROJECT CONSULTANTS

STRUCTURAL ENGINEER
Voss & Associates, Inc
201 North 8th Street, Suite 200
Lincoln, NE 68508
402-476-9545

MECHANICAL/ELECTRICAL ENGINEERS
Olson Associates
601 Old Cheney Road, Suite 200
Lincoln, NE 68508
402-474-5011

City of Hastings

Hastings City Auditorium Interior Renovation

SINCLAIR hille architects
700 Q St. Lincoln, NE 68508 T: 402 476 7331 F: 402 476 8341

Balcony Level Demolition Plan

SHA PROJECT NO. 15011

AD102

© Copyright SINCLAIR HILLE ARCHITECTS

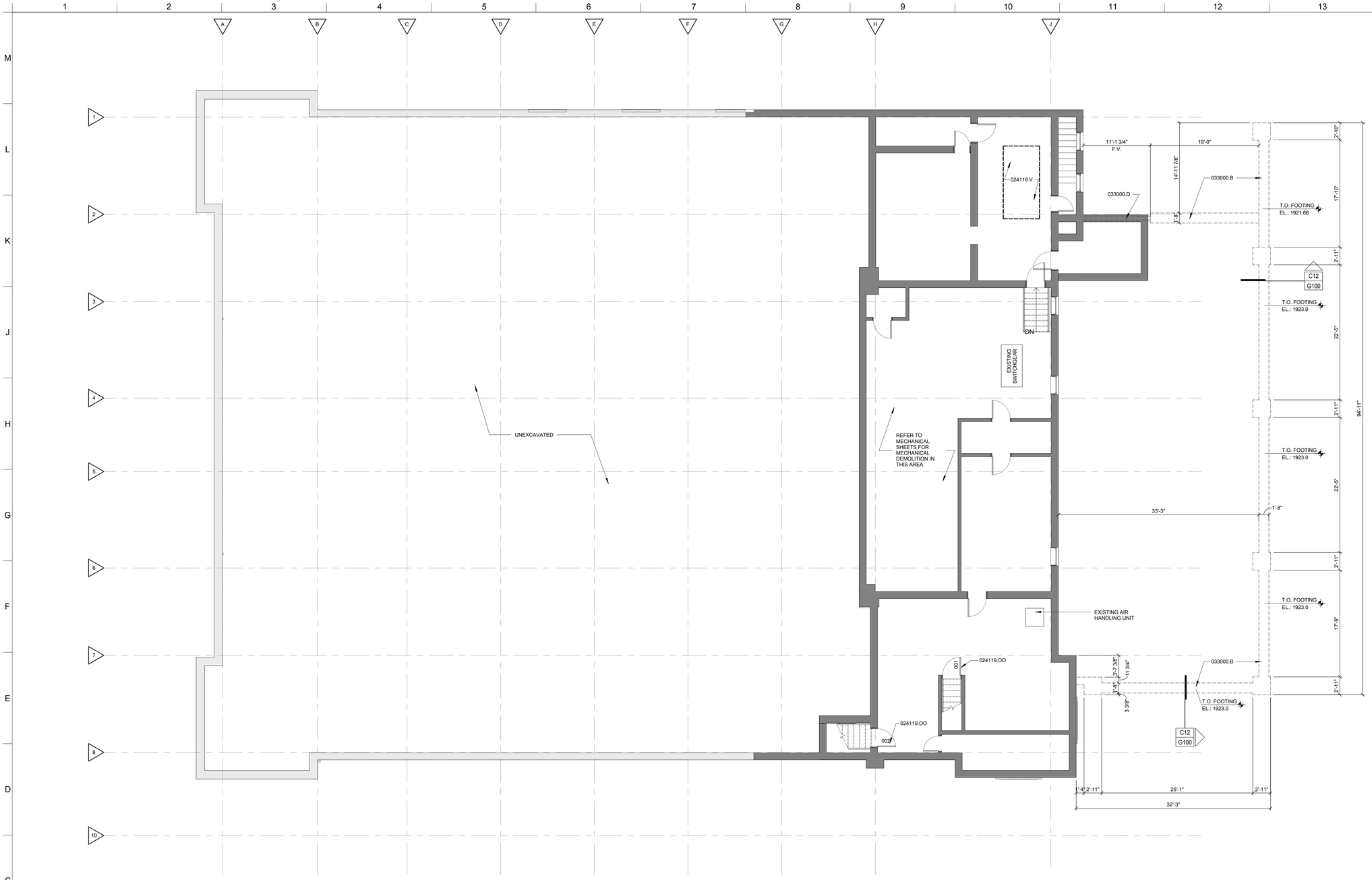

C1 BASEMENT / FOUNDATION PLAN

SCALE: 1/8" = 1'-0"

KEYNOTE LEGEND

024119.OO	REMOVE DOOR HANDLESET AS REQUIRED FOR NEW SCHEDULED HARDWARE
024119.V	DISMANTLE BOILER IN ITS ENTIRETY; SEE MECHANICAL DRAWINGS
033000.B	CAST CONCRETE FOOTING – SEE STRUCTURAL
033000.D	8" CONCRETE CURB – SEE STRUCTURAL

REVISIONS:

DESIGN ARCHITECT: Michael P. Sinclair

PROJECT ARCHITECT: Michael P. Sinclair

DRAWN BY: MPS / AMO

ISSUED: 11/09/2015

MICHAEL P. SINCLAIR A-4152 ARCHITECT STATE OF NEBRASKA

PROJECT CONSULTANTS

STRUCTURAL ENGINEER
Voss & Associates, Inc
201 North 8th Street, Suite 200
Lincoln, NE 68508
402-476-0665

MECHANICAL/ELECTRICAL ENGINEERS
Olsson Associates
601 P Street, Suite 200
Lincoln, NE 68508
402-474-6311

City of Hastings

Hastings City Auditorium Interior Renovation

SINCLAIR hille architects
700 Q St. Lincoln, NE 68508 T: 402 476 7331 F: 402 476 8341

Basement Floor Plan

SHA PROJECT NO. 15011

A100

© Copyright SINCLAIR HILLE ARCHITECTS

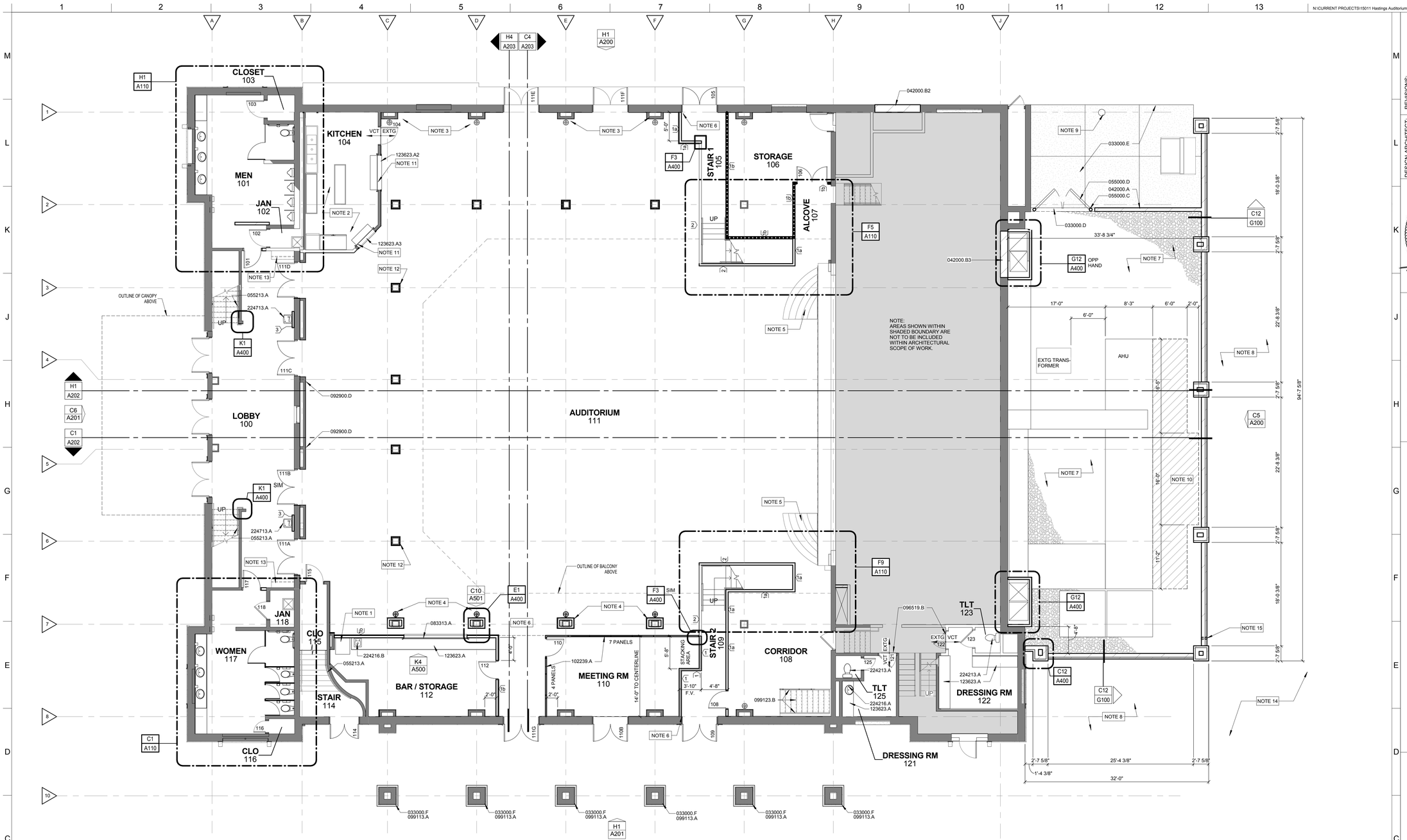

C1 FIRST FLOOR CONSTRUCTION PLAN

SCALE: 1/8" = 1'-0"

SHEET A101 SHEET SPECIFIC NOTES

NOTE 1 ICE MAKER BY OWNER
NOTE 2 KITCHEN EQUIPMENT IS EXISTING TO BE MAINTAINED; SHOWN FOR REFERENCE ONLY
NOTE 3 SEE TYPICAL PLASTER ELEVATION ON SHEET A500 FOR NEW FINISH EXTENTS.
NOTE 4 SEE TYPICAL DETAILS FOR FURRING OUT OF EXISTING COLUMNS AND RELOCATION OF WALL SCONCE AND WOOD TRIM
NOTE 5 MOVABLE RISERS; EXISTING TO REMAIN. PROTECT DURING DURATION OF CONSTRUCTION. SEE FINISH SCHEDULE FOR NEW FINISHES.
NOTE 6 ALIGN WITH ADJACENT CONSTRUCTION
NOTE 7 CRUSHED ROCK SURFACING - 6" DEPTH, GRADATION LIMITS TO BE PER TABLE 1033.08 OF THE NDOR STANDARD SPECIFICATIONS FOR HIGHWAY CONSTRUCTION. PROVIDE WEED BARRIER BELOW.
NOTE 8 RESTORE LANDSCAPE TO ORIGINAL CONDITION UPON COMPLETION OF ENCLOSURE WALL
NOTE 9 EXUSTING UTILITY POLE; PROTECT DURING COURSE OF CONSTRUCTION

SHEET A101 SHEET SPECIFIC NOTES

NOTE 10 HATCHED AREA INDICATES REQUIRED CLEAR AREA FOR AIR HANDLER UNIT; COORDINATE WITH ALL TRADES
NOTE 11 MAINTAIN EXISTING COUNTER DOOR
NOTE 12 ALL COLUMNS TO RECEIVE NEW FINISHES PER ROOM FINISH SCHEDULE
NOTE 13 MAINTAIN EXISTING COAT ROD AND SHELF
NOTE 14 COORDINATE RELOCATION OF LAWN IRRIGATION LINES WITH OWNER
NOTE 15 PROVIDE 4-INCH SCHEDULE 40 PVC SLEEVE AT FINISH GRADE IN SCREEN WALL FOR CONNECTING TEMPORARY WIRES TO DISCONNECT INSIDE ENCLOSURE. BOTTOM OF SLEEVE TO BE AT FINISH GRADE. SLEEVE TO BE FLUSH WITH INTERIOR AND EXTERIOR FACE OF WALL ASSEMBLY.

KEYNOTE LEGEND

033000.D	8" CONCRETE CURB – SEE STRUCTURAL
033000.E	7" CONCRETE PAD OVER 12" STABALIZED AND COMPACTED SUBGRADE
033000.F	REPLACE AND PATCH DETERIORATED CONCRETE BASE; APPLY PRIMER AND STAIN AS SPECIFIED
042000.A	8" CMU
042000.B2	BRICK MASONRY INFILL; MATCH EXISTING THICKNESS. TOOTH BRICK VENEER INTO EXISTING
042000.B3	
055000.C	STEEL GATE POST; SEE STRUCTURAL
055000.D	HSS4x2x3/16 STEEL MECHANICAL ENCLOSURE GATE FRAME
055213.A	STEEL HANDRAIL, 1-1/4" DIAMETER, WALL-MOUNTED – PAINT FINISH

KEYNOTE LEGEND

083313.A	COILING COUNTER DOOR
092900.D	PATCH & REPAIR GWB FINISH
096519.B	FLOORING TRANSITION
099113.A	PAINT FINISH; SEE SPECIFICATIONS
099123.B	PAINT FINISH; SEE FINISH SCHEDULE
102239.A	FOLDING PANEL PARTITION
123623.A	PLASTIC-LAMINATE-CLAD COUNTERTOP WITH BACKSPLASH, SIDESPLASH, & FRONT APRON
123623.A2	PLASTIC-LAMINATE-CLAD COUNTERTOP – 6'-0" WIDE X 2'-0" DEEP
123623.A3	PLASTIC-LAMINATE-CLAD COUNTERTOP – 4'-0" WIDE X 2'-0" DEEP
224213.A	WATER CLOSET; SEE MECHANICAL
224216.A	LAVATORY & FAUCET; SEE MECHANICAL
224216.B	SINGLE BOWL SINK & FAUCET; SEE MECHANICAL
224713.A	DRINKING FOUNTAIN; SEE MECHANICAL

REVISIONS:

DESIGN ARCHITECT: Michael P Sinclair
PROJECT ARCHITECT: Michael P Sinclair
DRAWN BY: MPS / AMO
ISSUED: 11/09/2015

MICHAEL P. SINCLAIR A-4152 NEBRASKA

PROJECT CONSULTANTS

STRUCTURAL ENGINEER
Voss & Associates, Inc
201 North 8th Street, Suite 200
Lincoln, NE 68508
402-476-6064

MECHANICAL/ELECTRICAL ENGINEERS
Olsson Associates
601 P Street, Suite 200
Lincoln, NE 68508
402-474-6311

City of Hastings

Hastings City Auditorium Interior Renovation

SINCLAIR hille architects
700 Q St. Lincoln, NE 68508 T: 402 476 7331 F: 402 476 8341

First Floor Construction Plan

SHA PROJECT NO. 15011

A101

© Copyright SINCLAIR HILLE ARCHITECTS

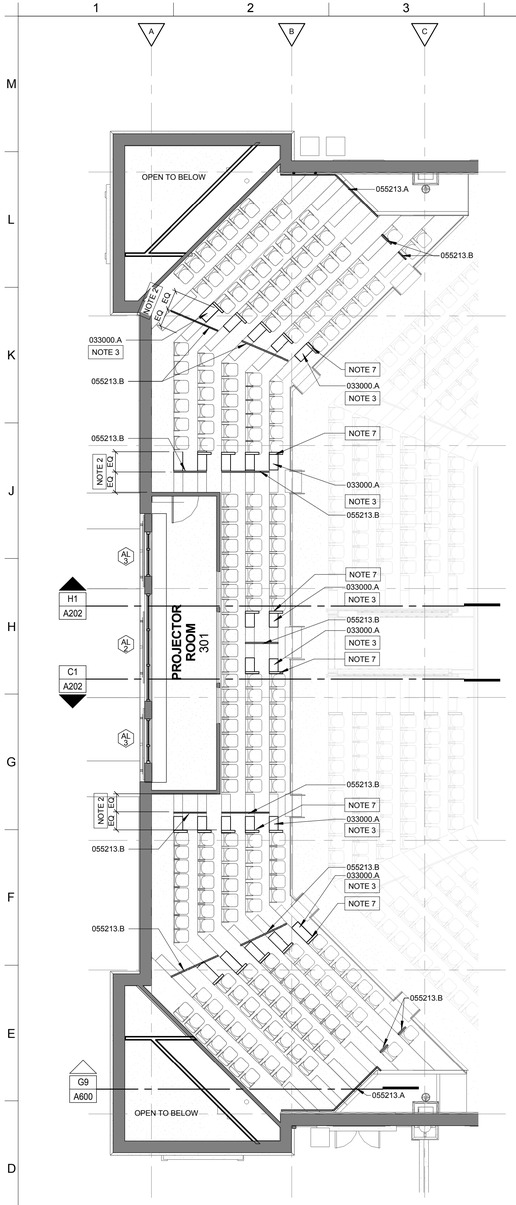

C1 UPPER BOWL PLAN

SCALE: 1/8" = 1'-0"

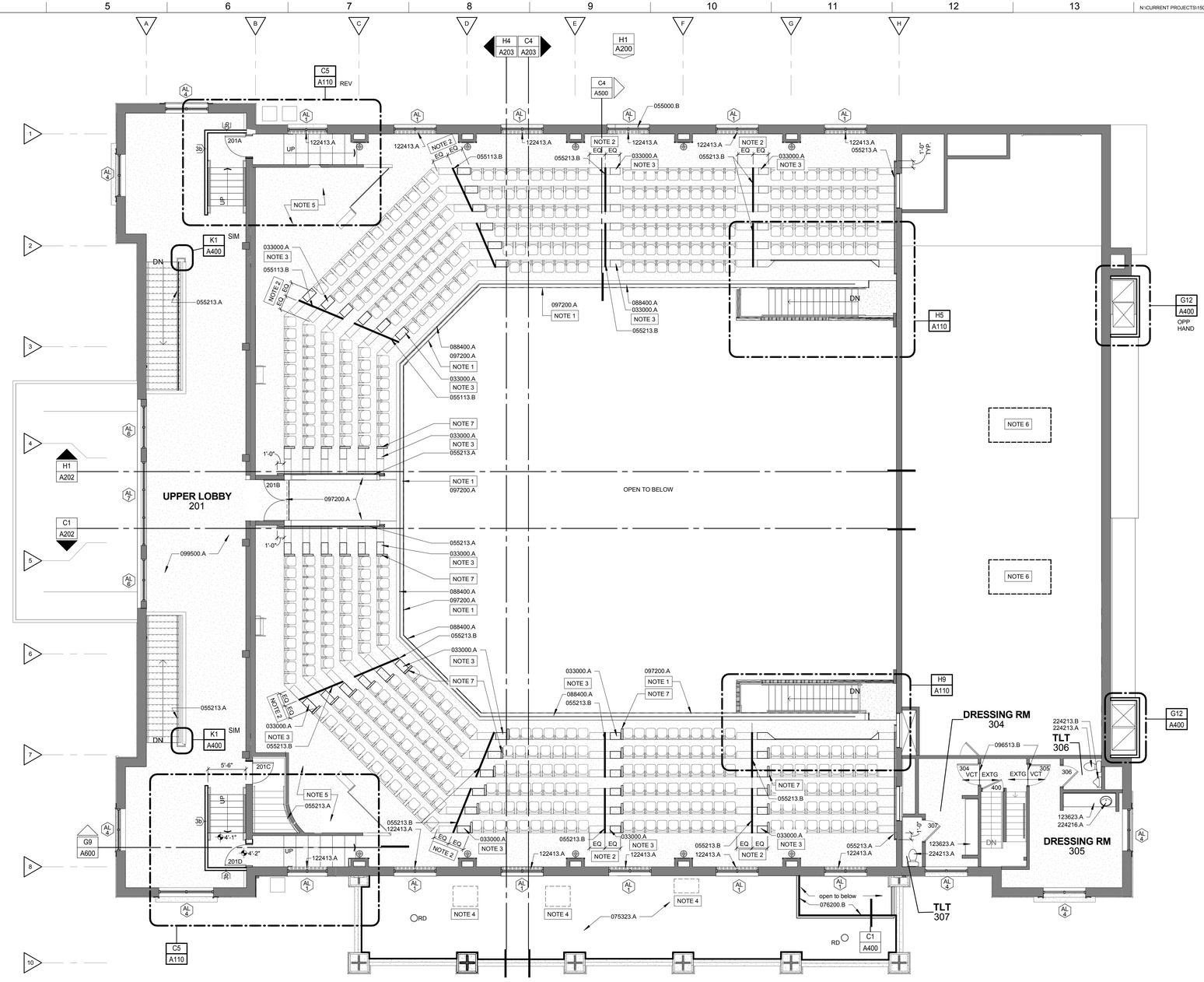

C4 BALCONY FLOOR PLAN

SCALE: 1/8" = 1'-0"

SHEET A102 SHEET SPECIFIC NOTES

NOTE 1	NEW WALL COVERING INFILL; SEE ELEVATION FOR EXTENTS
NOTE 2	23" MINIMUM CLEAR BETWEEN HANDRAIL AND SEATING
NOTE 3	TYPICAL FOR ALL STEPS THIS AISLE; SEE DETAILS ON E9/S101
NOTE 4	HEAT PUMP; SEE MECHANICAL
NOTE 5	SEE UPPER BOWL PLAN FOR CONTINUATION OF SEATING
NOTE 6	ROOF-MOUNTED SMOKE VENT; PROVIDE NECESSARY BLOCKING AND CURB PER MANUFACTURER'S RECOMMENDATION; SEE MECHANICAL. MAINTAIN EXISTING ROOFING WARRANTY.
NOTE 7	REINSTALL AISLE END PANEL FROM SALVAGE; TYP. SEE ELECTRICAL FOR LIGHTING CONNECTIONS.

KEYNOTE LEGEND

033000.A	EXTEND EXISTING CONCRETE STEP TO FILL VOID REMAINING FROM REMOVAL OF FIXED SEAT; MATCH EXISTING PROFILE – SEE STRUCTURAL
055000.B	STEEL LINTEL AT NEW OPENING; SEE STRUCTURAL
055113.B	STEEL PAN LANDING
055213.A	STEEL HANDRAIL, 1-1/4" DIAMETER, WALL-MOUNTED – PAINT FINISH
055213.B	STEEL HANDRAIL, 1-1/4" DIAMETER, FLOOR-MOUNTED – PAINT FINISH
075323.A	EPDM FLEECEBACK ROOFING SYSTEM
076200.B	NEW GUTTER; TIE IN TO EXISTING DOWNSPOUT
088400.A	MONOLITHIC CLEAR SCRATCH-RESISTANT ACRYLIC GLAZING PANELS; ATTACH TO OUTSIDE FACE OF EXISTING GUARDRAIL ASSEMBLY
096513.B	FLOORING TRANSITION STRIP
097200.A	SCHEDULED WALL COVERING
099500.A	EPOXY BROADCAST SYSTEM FLOORING
122413.A	ROLLER WINDOW SHADE
123623.A	PLASTIC-LAMINATE-CLAD COUNTERTOP WITH BACKSPLASH, SIDESPLASH, & FRONT APRON
224213.A	WATER CLOSET; SEE MECHANICAL
224213.B	URINAL; SEE MECHANICAL
224216.A	LAVATORY & FAUCET; SEE MECHANICAL

REVISIONS:

DESIGN ARCHITECT: Michael P. Sinclair

PROJECT ARCHITECT: Michael P. Sinclair

DRAWN BY: MPS / AMO

ISSUED: 11/09/2015

MICHAEL P. SINCLAIR A-4152 NEBRASKA STATE OF NEBRASKA ARCHITECT

PROJECT CONSULTANTS

STRUCTURAL ENGINEER
Voss & Associates, Inc
201 North Cotner Blvd, Suite 200
Lincoln, NE 68505
402-476-9545

MECHANICAL/ELECTRICAL ENGINEERS
Olsson Associates
601 P Street, Suite 200
Lincoln, NE 68508
402-474-6311

City of Hastings

Hastings City Auditorium Interior Renovation

SINCLAIR hille architects
700 Q St. Lincoln, NE 68508 T: 402 476 7331 F: 402 476 8341

Balcony Level Construction Plans

SHA PROJECT NO. 15011

A102

© Copyright SINCLAIR HILLE ARCHITECTS

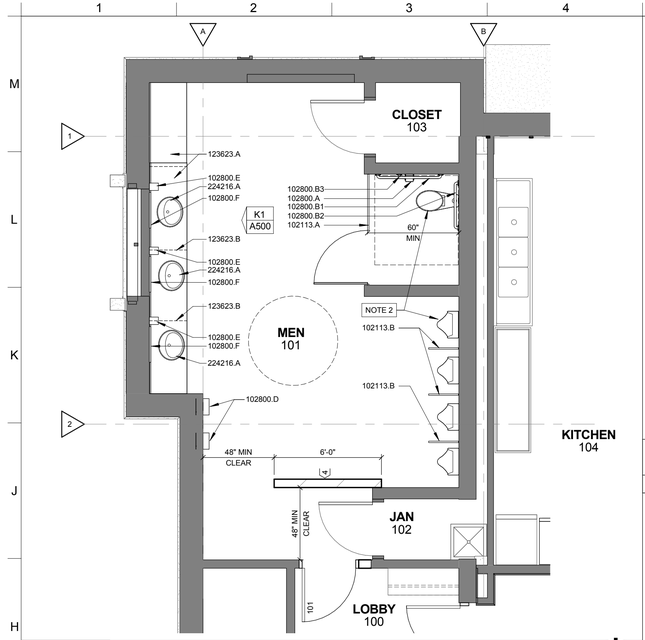

H1 ENLARGED PLAN

SCALE: 1/4" = 1'-0" AUDITORIUM MEN'S RESTROOM

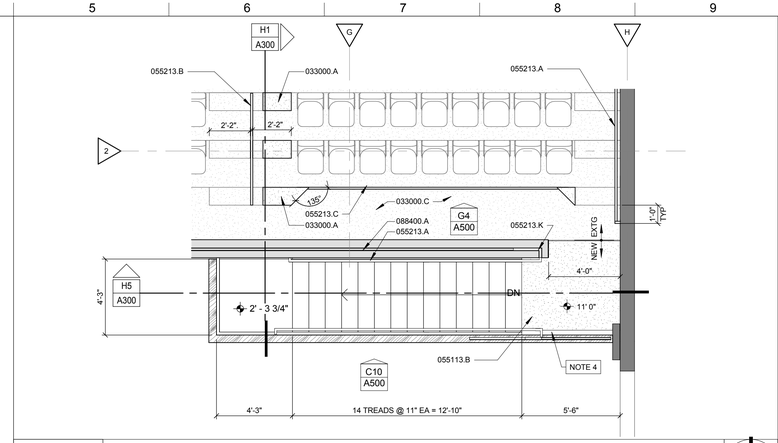

H5 ENLARGED PLAN

SCALE: 1/4" = 1'-0" AUDITORIUM NORTH STAIR - BALCONY LEVEL

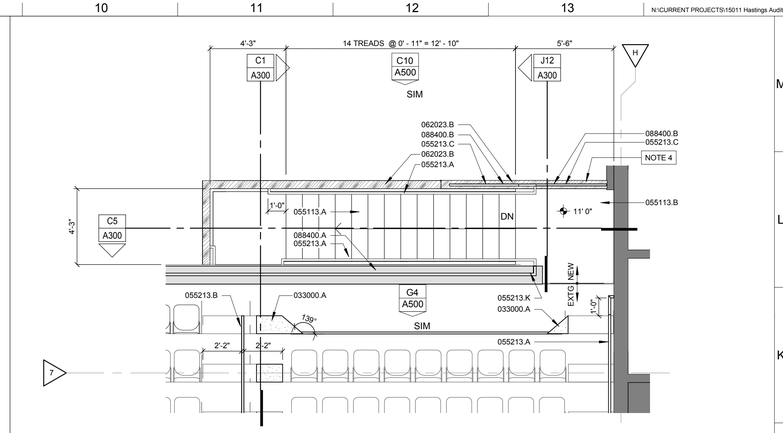

H9 ENLARGED PLAN

SCALE: 1/4" = 1'-0" AUDITORIUM SOUTH STAIR - BALCONY LEVEL

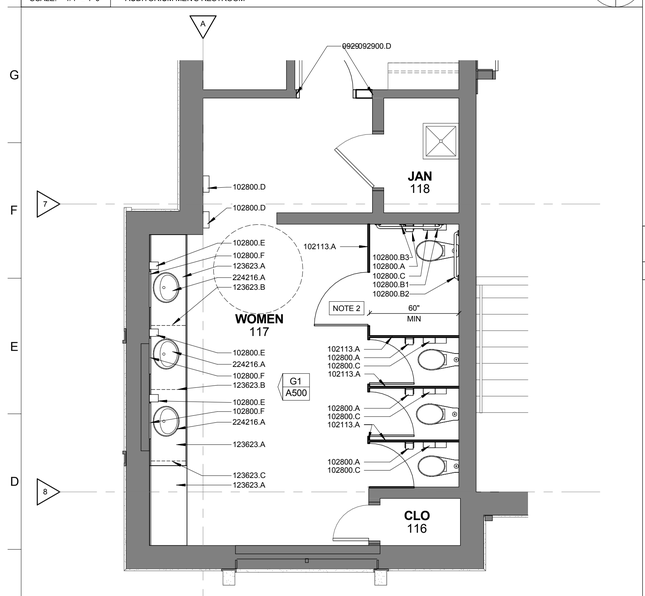

C1 ENLARGED PLAN

SCALE: 1/4" = 1'-0" WOMEN'S RESTROOM

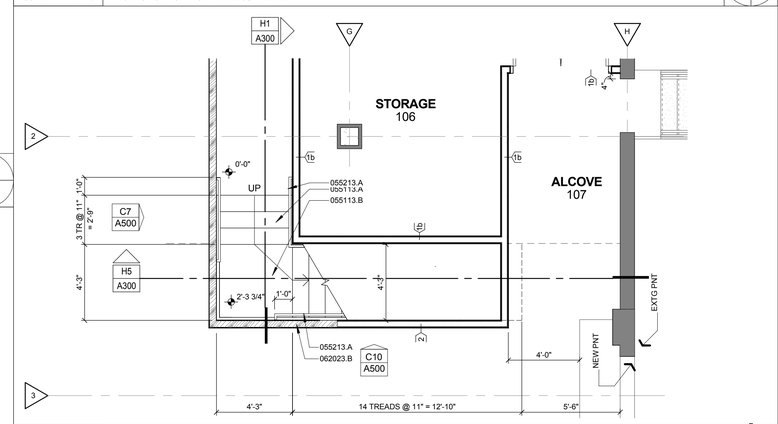

F5 ENLARGED PLAN

SCALE: 1/4" = 1'-0" AUDITORIUM NORTH STAIR - BALCONY LEVEL

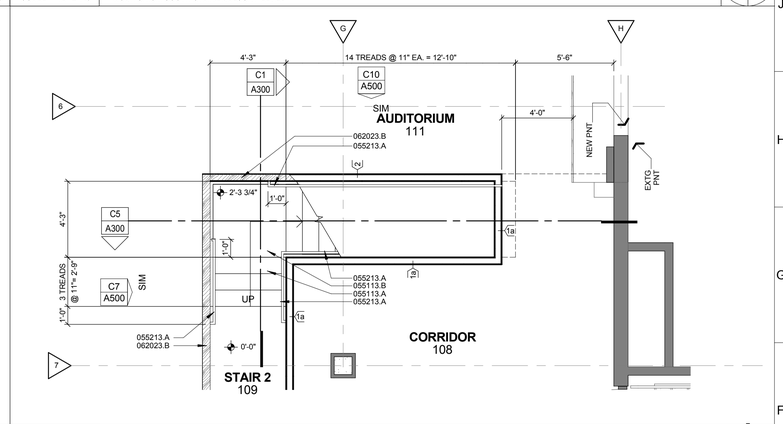

F9 ENLARGED PLAN

SCALE: 1/4" = 1'-0" AUDITORIUM SOUTH STAIR - BALCONY LEVEL

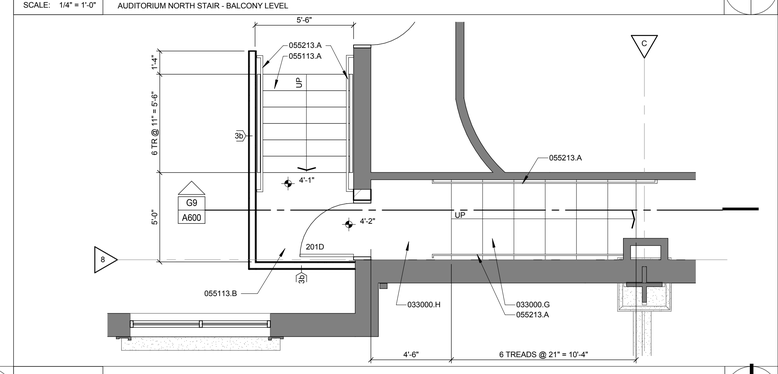

C5 ENLARGED PLAN

SCALE: 1/4" = 1'-0" AUDITORIUM NORTH STAIR - FIRST FLOOR

SHEET A110 SHEET SPECIFIC NOTES

NOTE 2 NEW PLUMBING FIXTURES TO UTILIZE EXISTING PLUMBING ROUGH-INS. CENTER TOILET PARTITIONS ACCORDINGLY, ALLOWING FOR PROPER CLEARENCES AT ACCESSIBLE STALLS.

NOTE 4 TOP OF WALL TO MATCH EXISTING BALCONY WALL

KEYNOTE LEGEND

033000.A	EXTEND EXISTING CONCRETE STEP TO FILL VOID REMAINING FROM REMOVAL OF FIXED SEAT; MATCH EXISTING PROFILE – SEE STRUCTURAL
033000.C	PATCH/REPAIR CONCRETE AS REQUIRED FROM REMOVAL OF SEATING
033000.G	CONCRETE STEPS
033000.H	CONCRETE LANDING
055113.A	PREASSEMBLED STEEL STAIRS WITH CONCRETE-FILLED TREADS
055113.B	STEEL PAN LANDING
055213.A	STEEL HANDRAIL, 1-1/4" DIAMETER, WALL-MOUNTED – PAINT FINISH
055213.B	STEEL HANDRAIL, 1-1/4" DIAMETER, FLOOR-MOUNTED – PAINT FINISH
055213.C	STEEL GUARDRAIL; MATCH EXISTING
055213.J	RAILING CONNECTIONS PROVIDED BY STEEL FABRICATOR
055213.K	STEEL HANDRAIL, RETURN TO KNEE-WALL BELOW
062023.B	WOOD WALL CAP; MATCH EXISTING PROFILE & FINISH

KEYNOTE LEGEND

088400.A	MONOLITHIC CLEAR SCRATCH-RESISTANT ACRYLIC GLAZING PANELS; ATTACH TO OUTSIDE FACE OF EXISTING GUARDRAIL ASSEMBLY
088400.B	MONOLITHIC CLEAR SCRATCH-RESISTANT ACRYLIC GLAZING PANEL; ATTACH TO FACE OF GUARDRAIL ASSEMBLY
092900.D	PATCH & REPAIR GWB FINISH
102113.A	TOILET PARTITION; FLOOR-MOUNTED/OVERHEAD BRACED
102113.B	URINAL SCREEN
102800.A	TOILET TISSUE DISPENSER
102800.B1	GRAB BAR – 42" LENGTH
102800.B2	GRAB BAR – 36" LENGTH
102800.B3	GRAB BAR – VERTICAL – 18" HEIGHT MINIMUM
102800.C	SANITARY NAPKIN DISPOSAL UNIT
102800.D	AUTOMATIC HAND DRYER
102800.E	LIQUID-SOAP DISPENSER
102800.F	MIRROR
123623.A	PLASTIC-LAMINATE-CLAD COUNTERTOP WITH BACKSPLASH, SIDESPLASH, & FRONT APRON
123623.B	SUPPORT BRACKET
123623.C	PLASTIC-LAMINATE CLAD SUPPORT WALL
224216.A	LAVATORY & FAUCET; SEE MECHANICAL

REVISIONS:

DESIGN ARCHITECT: Michael P Sinclair
PROJECT ARCHITECT: Michael P Sinclair
DRAWN BY: MPS / AMO
ISSUED: 11/09/2015

ARCHITECT MICHAEL P SINCLAIR A-4152 STATE OF NEBRASKA

PROJECT CONSULTANTS

STRUCTURAL ENGINEER
Voss & Associates, Inc
201 North Cotner Blvd, Suite 200
Lincoln, NE 68505
402-476-0664

MECHANICAL/ELECTRICAL ENGINEERS
Olson Associates
601 Old Cheney Road, Suite 200
Lincoln, NE 68508
402-474-6311

City of Hastings

Hastings City Auditorium Interior Renovation

SINCLAIR hille architects
700 Q St. Lincoln, NE 68508 T: 402 476 7331 F: 402 476 8341

Enlarged Plans - Restrooms & Stairs

SHA PROJECT NO. 15011

A110

© Copyright SINCLAIR HILLE ARCHITECTS

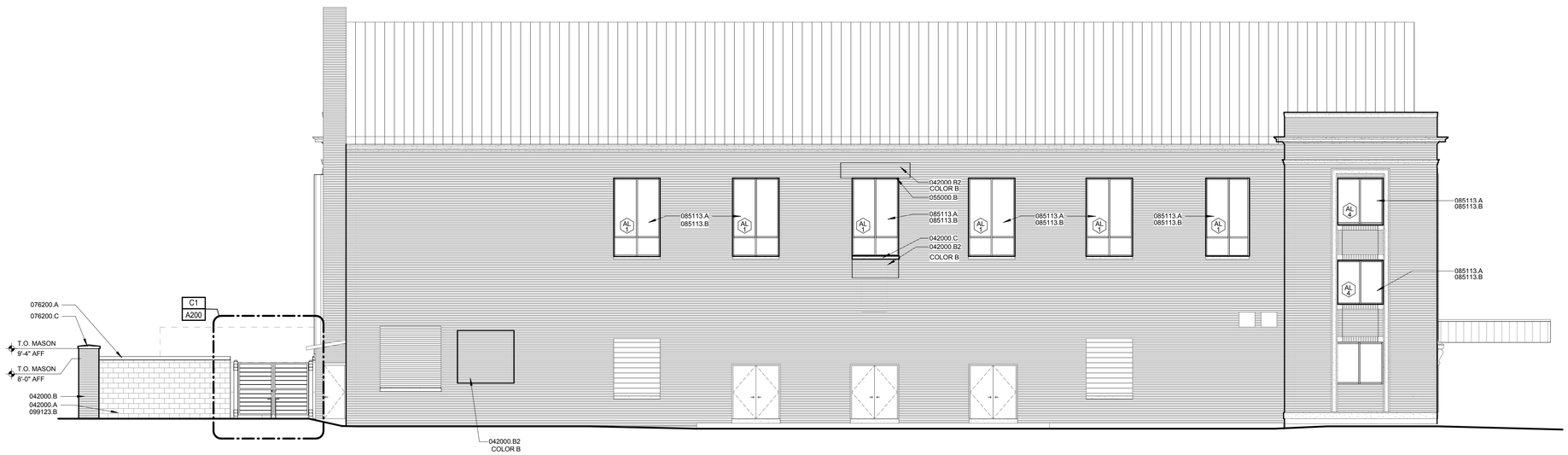

H1 NORTH ELEVATION

SCALE: 1/8" = 1'-0"

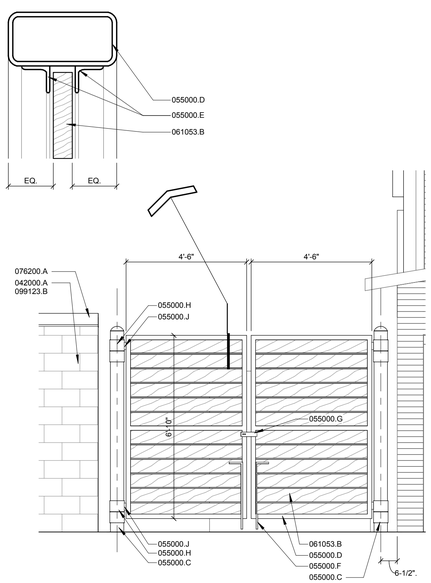

C1 ENCLOSURE GATE

SCALE: 3/8" = 1'-0"

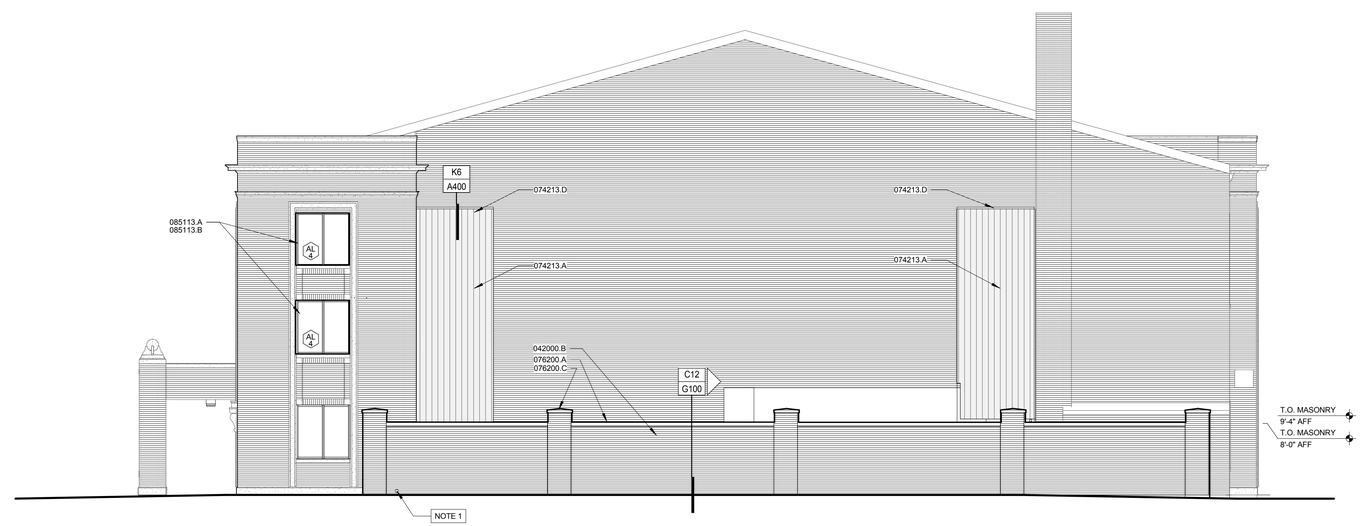

C5 EAST ELEVATION

SCALE: 1/8" = 1'-0"

SHEET A200 SHEET SPECIFIC NOTES

NOTE 1 PROVIDE 4-INCH SCHEDULE 40 PVC SLEEVE AT FINISH GRADE IN SCREEN WALL FOR CONNECTING TEMPORARY WIRES TO DISCONNECT INSIDE ENCLOSURE. BOTTOM OF SLEEVE TO BE AT FINISH GRADE. SLEEVE TO BE FLUSH WITH INTERIOR AND EXTERIOR FACE OF WALL ASSEMBLY.

KEYNOTE LEGEND

042000.A	8" CMU
042000.B	BRICK VENEER
042000.B2	BRICK MASONRY INFILL; MATCH EXISTING THICKNESS. TOOTH BRICK VENEER INTO EXISTING
042000.C	TERRA-COTTA SILL; MATCH EXISTING PROFILE, COLOR, AND FINISH
055000.B	STEEL LINTEL AT NEW OPENING; SEE STRUCTURAL
055000.C	STEEL GATE POST; SEE STRUCTURAL
055000.D	HSS4x2x3/16 STEEL MECHANICAL ENCLOSURE GATE FRAME

KEYNOTE LEGEND

055000.E	L1x1x1/8 STEEL MECHANICAL ENCLOSURE PANEL STOP
055000.F	GATE DROP ROD
055000.G	GATE LATCH ASSEMBLY
055000.H	6" STEEL GATE COLLAR – FREE TO PIVOT
055000.J	STEEL CONNECTION PLATE
061053.B	1x6 CEDAR PANELS – SECURE TO ENCLOSURE GATE BETWEEN STEEL ANGLE PANEL STOPS
074213.A	METAL LINER PANEL
074213.D	STANDING SEAM ROOFING
076200.A	MANUFACTURED PREFINISHED COPING SYSTEM
076200.C	MANUFACTURED PREFINISHED PIER CAP
085113.A	MANUFACTURED WINDOW PANNING SYSTEM; PROVIDE NEW WOOD WINDOW BUCK TO MATCH EXISTING WINDOW PROFILES
085113.B	GLAZING UNIT
099123.B	PAINT FINISH; SEE FINISH SCHEDULE

REVISIONS:

DESIGN ARCHITECT: Michael P Sinclair
PROJECT ARCHITECT: Michael P Sinclair
DRAWN BY: MPS / AMO
ISSUED: 11/09/2015

MICHAEL P. SINCLAIR A-4152 STATE OF NEBRASKA ARCHITECT

PROJECT CONSULTANTS

STRUCTURAL ENGINEER
Voss & Associates, Inc
201 North 8th Street, Suite 200
Lincoln, NE 68508
402-476-6645

MECHANICAL/ELECTRICAL ENGINEERS
Olsson Associates
601 P Street, Suite 200
Lincoln, NE 68508
402-474-6311

City of Hastings

Hastings City Auditorium Interior Renovation

SINCLAIR hille architects
700 Q St. Lincoln, NE 68508 T: 402 476 7331 F: 402 476 8341

Exterior Elevations

SHA PROJECT NO. 15011

A200

© Copyright SINCLAIR HILLE ARCHITECTS

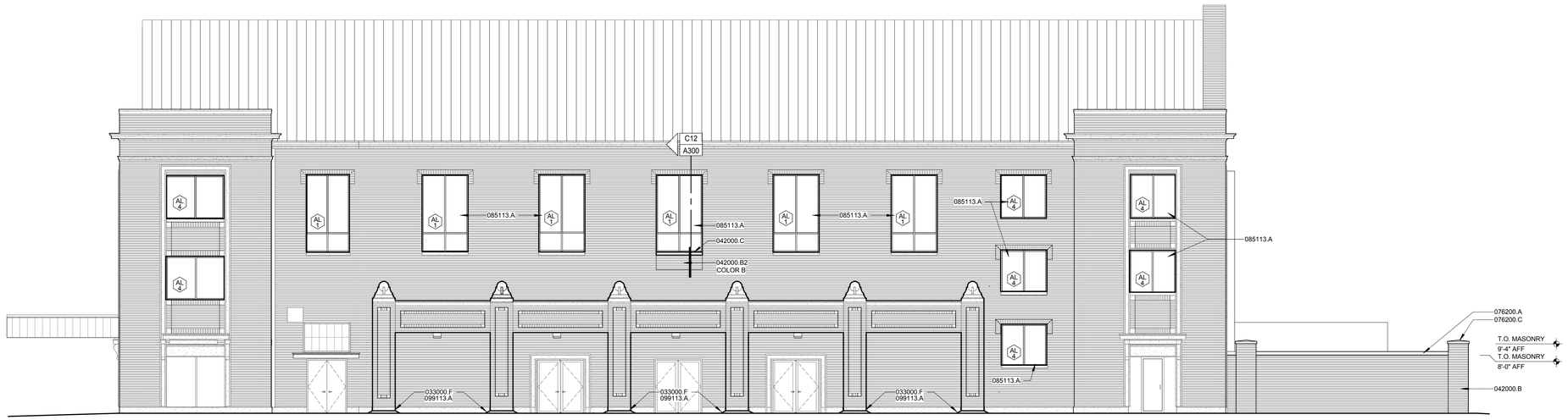

H1 SOUTH ELEVATION

SCALE: 1/8" = 1'-0"

C1 PERSPECTIVE VIEW OF MECHANICAL ENCLOSURE

SCALE:

C6 WEST ELEVATION

SCALE: 1/8" = 1'-0"

SHEET A201 SHEET SPECIFIC NOTES

NOTE 1 DIGITAL MARQUEE BY OWNER; PROVIDE REQUIRED CONDUIT (SEE ELECTRICAL)

KEYNOTE LEGEND

033000.F	REPLACE AND PATCH DETERIORATED CONCRETE BASE; APPLY PRIMER AND STAIN AS SPECIFIED
042000.B	BRICK VENEER
042000.B2	BRICK MASONRY INFILL; MATCH EXISTING THICKNESS. TOOTH BRICK VENEER INTO EXISTING
042000.C	TERRA-COTTA SILL; MATCH EXISTING PROFILE, COLOR, AND FINISH
076200.A	MANUFACTURED PREFINISHED COPING SYSTEM
076200.C	MANUFACTURED PREFINISHED PIER CAP
085113.A	MANUFACTURED WINDOW PANNING SYSTEM; PROVIDE NEW WOOD WINDOW BUCK TO MATCH EXISTING WINDOW PROFILES.
085113.B	GLAZING UNIT
099113.A	PAINT FINISH; SEE SPECIFICATIONS

REVISIONS:

DESIGN ARCHITECT: Michael P Sinclair
PROJECT ARCHITECT: Michael P Sinclair
DRAWN BY: MPS / AMO
ISSUED: 11/09/2015

ARCHITECT MICHAEL P. SINCLAIR A-4152 STATE OF NEBRASKA

PROJECT CONSULTANTS

STRUCTURAL ENGINEER
Voss & Associates, Inc
201 North Cotner Blvd, Suite 200
Lincoln, NE 68505
402-476-9444

MECHANICAL/ELECTRICAL ENGINEERS
Olson Associates
601 Old Cheney Road, Suite 200
Lincoln, NE 68508
402-414-1011

City of Hastings

Hastings City Auditorium Interior Renovation

SINCLAIR hille architects
700 Q St. Lincoln, NE 68508 T: 402 476 7331 F: 402 476 8341

Exterior Elevations

SHA PROJECT NO. 15011

A201

© Copyright SINCLAIR HILLE ARCHITECTS

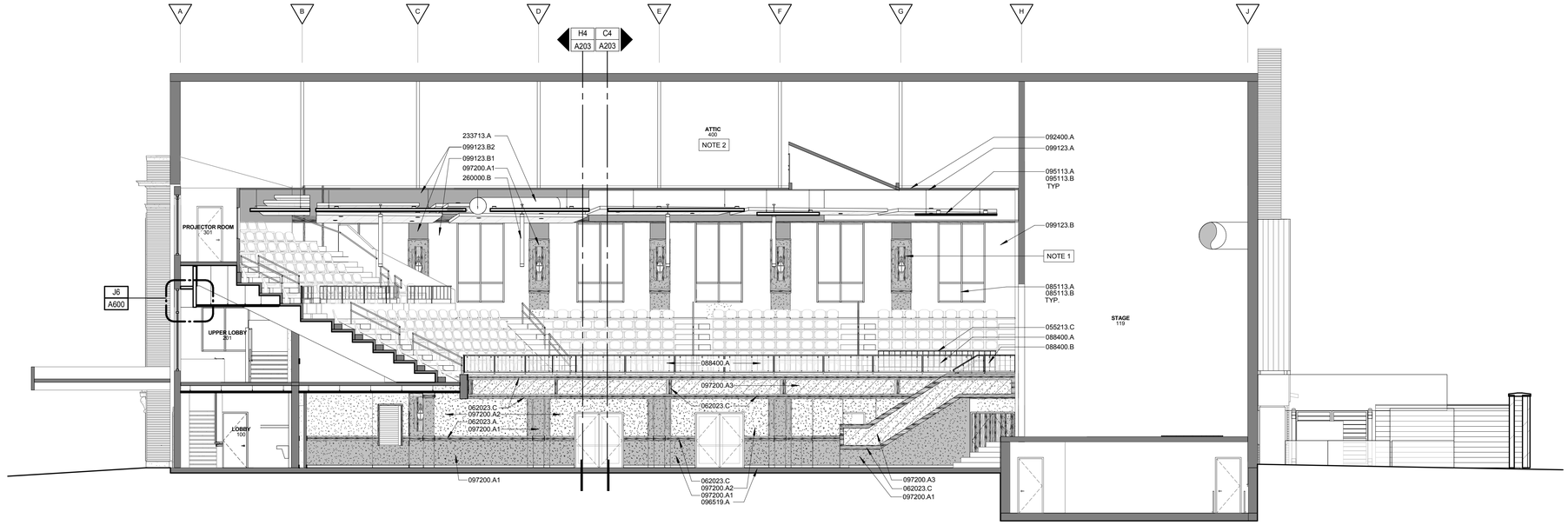

H1 INTERIOR SECTION / ELEVATION; LOOKING NORTH

SCALE: 1/8" = 1'-0"

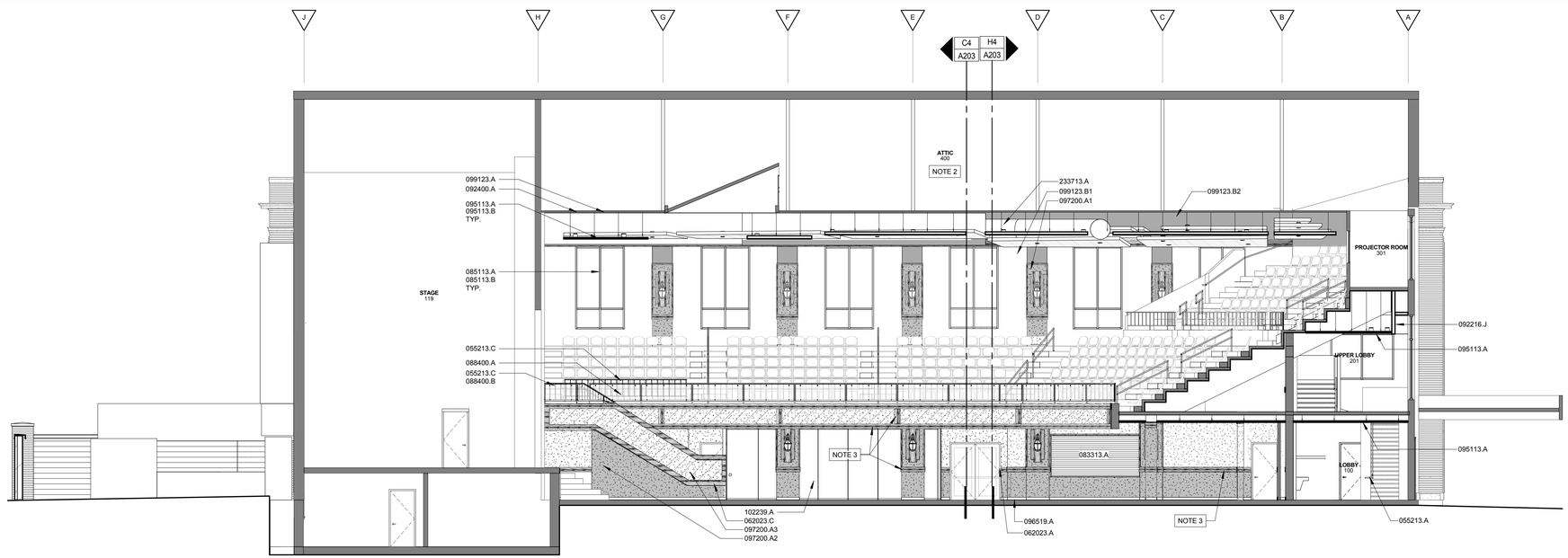

C1 INTERIOR SECTION / ELEVATION; LOOKING SOUTH

SCALE: 1/8" = 1'-0"

WALL FINISH LEGEND

- WC1 - 097200.A1
- WC2 - 097200.A2
- WC3 - 097200.A3
- WOOD TRIM / PANELING
- PNT 1
- PNT 2

SHEET A202 SHEET SPECIFIC NOTES

NOTE 1	SEE ENLARGED ELEVATION ON SHEET A500 FOR FINISH EXTENTS ON PLASTER.
NOTE 2	PROVIDE HEAT DETECTION SYSTEM; SEE MEP DRAWINGS
NOTE 3	EXISTING WOOD TRIM; TOUCH UP FINISH AS REQUIRED

KEYNOTE LEGEND

055213.A	STEEL HANDRAIL, 1-1/4" DIAMETER, WALL-MOUNTED – PAINT FINISH
055213.C	STEEL GUARDRAIL; MATCH EXISTING
062023.A	EXISTING WOOD TRIM; RESTORE DAMAGED OR SOILED AREAS AND TOUCH-UP FINISH AS NEEDED TO ACHIEVE UNIFORM APPEARANCE.
062023.C	WOOD TRIM; MATCH EXISTING PROFILE & FINISH
083313.A	COILING COUNTER DOOR
085113.A	MANUFACTURED WINDOW PANNING SYSTEM; PROVIDE NEW WOOD WINDOW BUCK TO MATCH EXISTING WINDOW PROFILES
085113.B	GLAZING UNIT

KEYNOTE LEGEND

088400.A	MONOLITHIC CLEAR SCRATCH-RESISTANT ACRYLIC GLAZING PANELS; ATTACH TO OUTSIDE FACE OF EXISTING GUARDRAIL ASSEMBLY
088400.B	MONOLITHIC CLEAR SCRATCH-RESISTANT ACRYLIC GLAZING PANEL; ATTACH TO FACE OF GUARDRAIL ASSEMBLY
092216.J	BULKHEAD
092400.A	PATCH EXISTING PLASTER CEILING AS NEEDED TO MAINTAIN 1HR RATING
095113.A	SUSPENDED ACOUSTICAL PANEL CEILING
095113.B	EXTRUDED ALUMINUM PERIMETER TRIM
096519.A	VINYL COMPOSITION FLOOR TILE
097200.A1	WALLCOVERING 1
097200.A2	WALLCOVERING 2
097200.A3	WALLCOVERING 3; WRAP SPECIFIED ACOUSTICAL BOARD
099123.A	PAINT EXISTING CEILING TILE – SEE FINISH SCHEDULE
099123.B	PAINT FINISH; SEE FINISH SCHEDULE
099123.B1	FIELD PAINT, PNT1 – SEE SPECIFICATIONS
099123.B2	ACCENT PAINT, PNT2 – SEE SPECIFICATIONS
102239.A	FOLDING PANEL PARTITION
233713.A	FABRIC DUCT; SEE MECHANICAL
260000.B	PENDANT LIGHT FIXTURE

REVISIONS:

DESIGN ARCHITECT: Michael P. Sinclair
PROJECT ARCHITECT: Michael P. Sinclair
DRAWN BY: MPS / AMO
ISSUED: 11/09/2015

MICHAEL P. SINCLAIR A-4152 ARCHITECT STATE OF NEBRASKA

PROJECT CONSULTANTS

STRUCTURAL ENGINEER
Voss & Associates, Inc
201 North Cotner Blvd, Suite 200
Lincoln, NE 68505
402-476-0900

MECHANICAL/ELECTRICAL ENGINEERS
Olson Associates
601 Old Cheney Road, Suite 200
Lincoln, NE 68508
402-414-5311

City of Hastings

Hastings City Auditorium Interior Renovation

SINCLAIR hille architects
700 Q St. Lincoln, NE 68508 T: 402 476 7331 F: 402 476 8341

Building Sections / Interior Elevations

SHA PROJECT NO. 15011

A202

© Copyright SINCLAIR HILLE ARCHITECTS

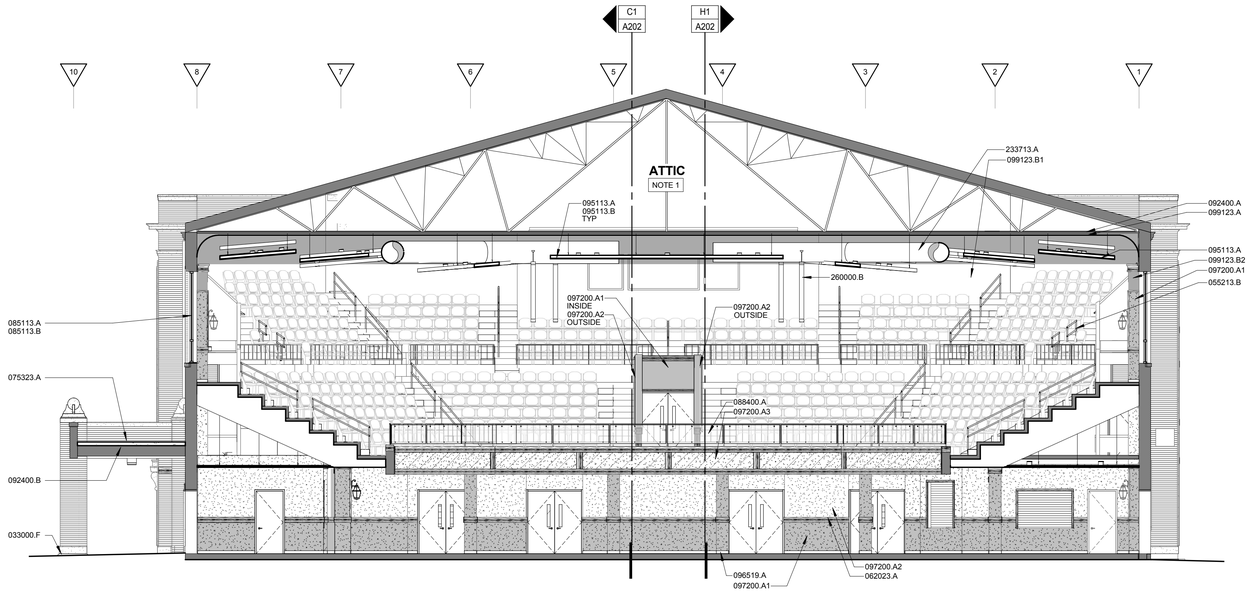

H4 INTERIOR SECTION / ELEVATION; LOOKING WEST

SCALE: 1/8" = 1'-0"

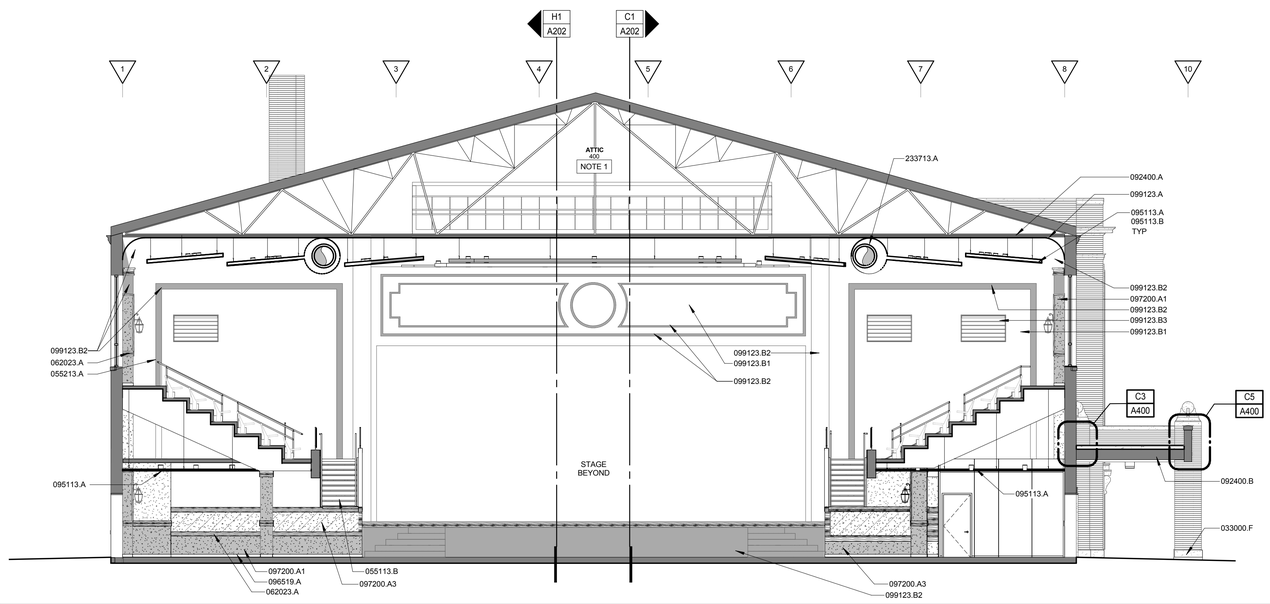

C4 INTERIOR SECTION / ELEVATION; LOOKING EAST

SCALE: 1/8" = 1'-0"

WALL FINISH LEGEND

- WC1 - 097200.A1
- WC2 - 097200.A2
- WC3 - 097200.A3
- WOOD TRIM / PANELING
- PNT 1
- PNT 2

SHEET A203 SHEET SPECIFIC NOTES

NOTE 1 PROVIDE HEAT DETECTION SYSTEM; SEE MEP DRAWINGS

KEYNOTE LEGEND

033000.F	REPLACE AND PATCH DETERIORATED CONCRETE BASE; APPLY PRIMER AND STAIN AS SPECIFIED
055113.B	STEEL PAN LANDING
055213.A	STEEL HANDRAIL, 1-1/4" DIAMETER, WALL-MOUNTED – PAINT FINISH
055213.B	STEEL HANDRAIL, 1-1/4" DIAMETER, FLOOR-MOUNTED – PAINT FINISH
062023.A	EXISTING WOOD TRIM; RESTORE DAMAGED OR SOILED AREAS AND TOUCH-UP FINISH AS NEEDED TO ACHIEVE UNIFORM APPEARANCE.
075323.A	EPDM FLEECEBACK ROOFING SYSTEM
085113.A	MANUFACTURED WINDOW PANNING SYSTEM; PROVIDE NEW WOOD WINDOW BUCK TO MATCH EXISTING WINDOW PROFILES
085113.B	GLAZING UNIT

KEYNOTE LEGEND

088400.A	MONOLITHIC CLEAR SCRATCH-RESISTANT ACRYLIC GLAZING PANELS; ATTACH TO OUTSIDE FACE OF EXISTING GUARDRAIL ASSEMBLY
092400.A	PATCH EXISTING PLASTER CEILING AS NEEDED TO MAINTAIN 1HR RATING
092400.B	NEW EXTERIOR PLASTERWORK ON UNDERSIDE OF PORTICO ROOF
095113.A	SUSPENDED ACOUSTICAL PANEL CEILING
095113.B	EXTRUDED ALUMINUM PERIMETER TRIM
096519.A	VINYL COMPOSITION FLOOR TILE
097200.A1	WALLCOVERING 1
097200.A2	WALLCOVERING 2
097200.A3	WALLCOVERING 3; WRAP SPECIFIED ACOUSTICAL BOARD
099123.A	PAINT EXISTING CEILING TILE – SEE FINISH SCHEDULE
099123.B1	FIELD PAINT, PNT1 – SEE SPECIFICATIONS
099123.B2	ACCENT PAINT, PNT2 – SEE SPECIFICATIONS
099123.B3	EXISTING MECHANICAL LOUVER; PAINT TO MATCH ADJACENT SURFACE
233713.A	FABRIC DUCT; SEE MECHANICAL
260000.B	PENDANT LIGHT FIXTURE

REVISIONS:

DESIGN ARCHITECT: Michael P Sinclair
PROJECT ARCHITECT: Michael P Sinclair
DRAWN BY: MPS / AMO
ISSUED: 11/09/2015

ARCHITECT MICHAEL P. SINCLAIR A-4152 STATE OF NEBRASKA

PROJECT CONSULTANTS

STRUCTURAL ENGINEER
Voss & Associates, Inc
201 North Cotner Blvd, Suite 200
Lincoln, NE 68505
402-476-9000

MECHANICAL/ELECTRICAL ENGINEERS
Olsson Associates
601 P Street, Suite 200
Lincoln, NE 68508
402-474-6311

City of Hastings

Hastings City Auditorium Interior Renovation

SINCLAIR hille architects
700 Q St. Lincoln, NE 68508 T: 402 476 7331 F: 402 476 8341

Building Sections

SHA PROJECT NO. 15011

A203

© Copyright SINCLAIR HILLE ARCHITECTS

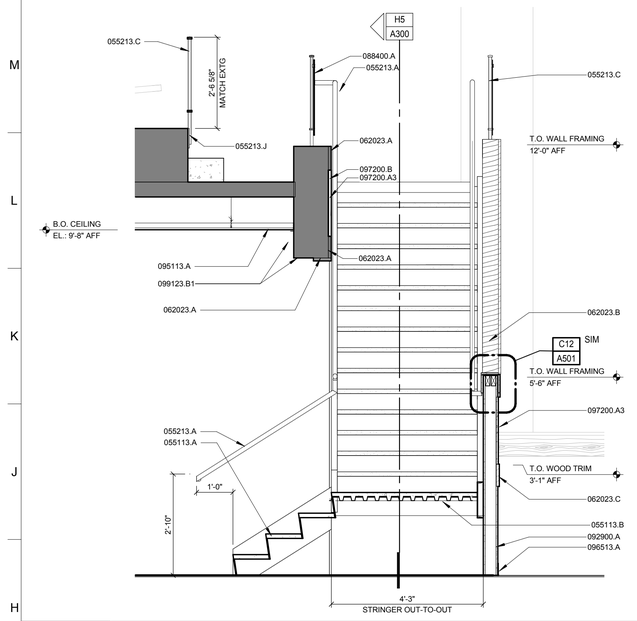

H1 NORTH STAIR SECTION 2

SCALE: 1/2" = 1'-0"

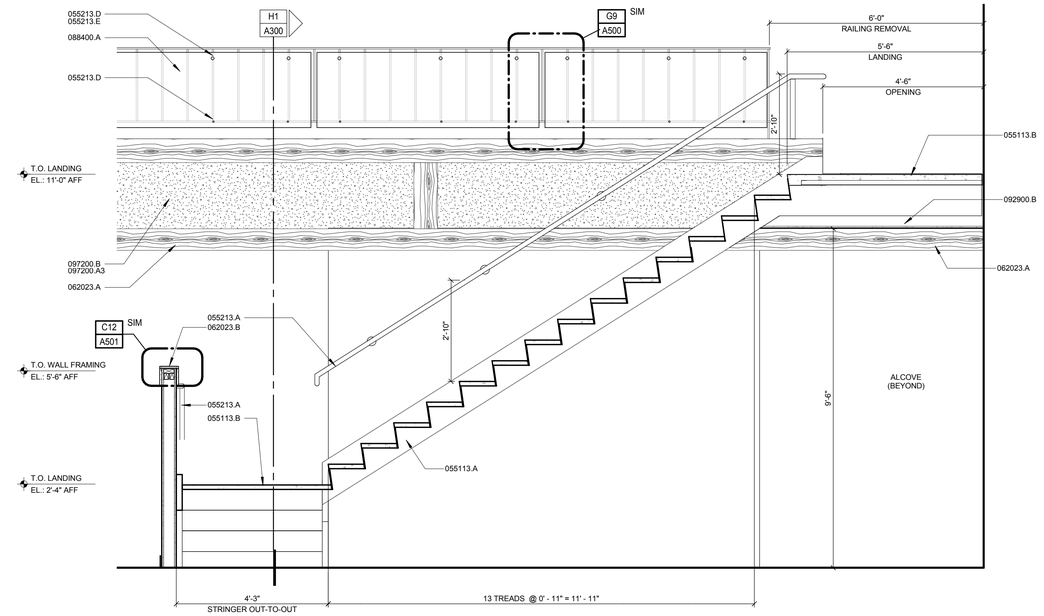

H5 NORTH STAIR SECTION 1

SCALE: 1/2" = 1'-0"

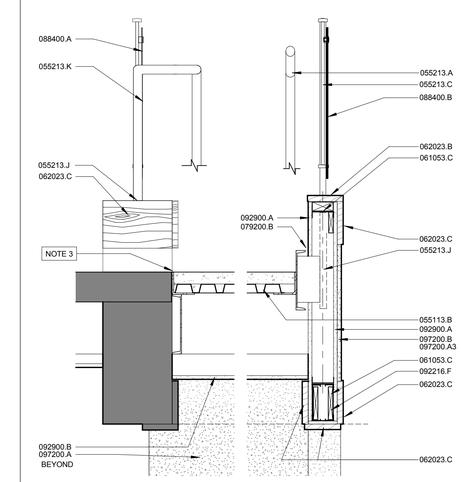

J12 STAIR DETAIL

SCALE: 1" = 1'-0"

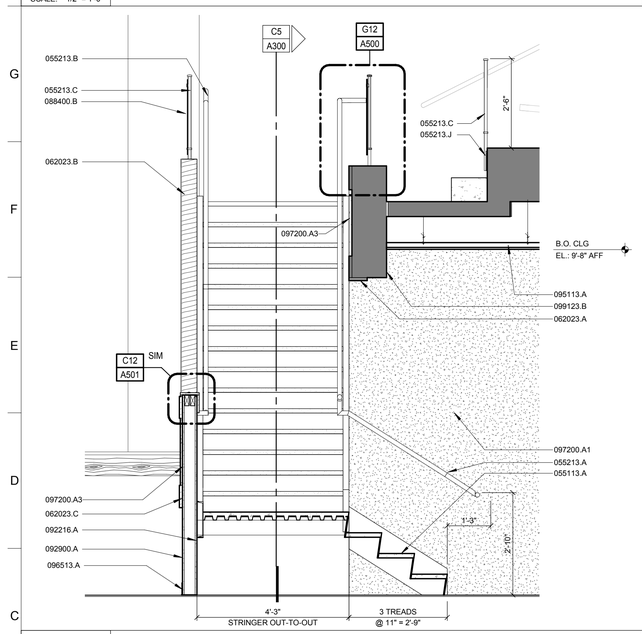

C1 SOUTH STAIR SECTION 2

SCALE: 1/2" = 1'-0"

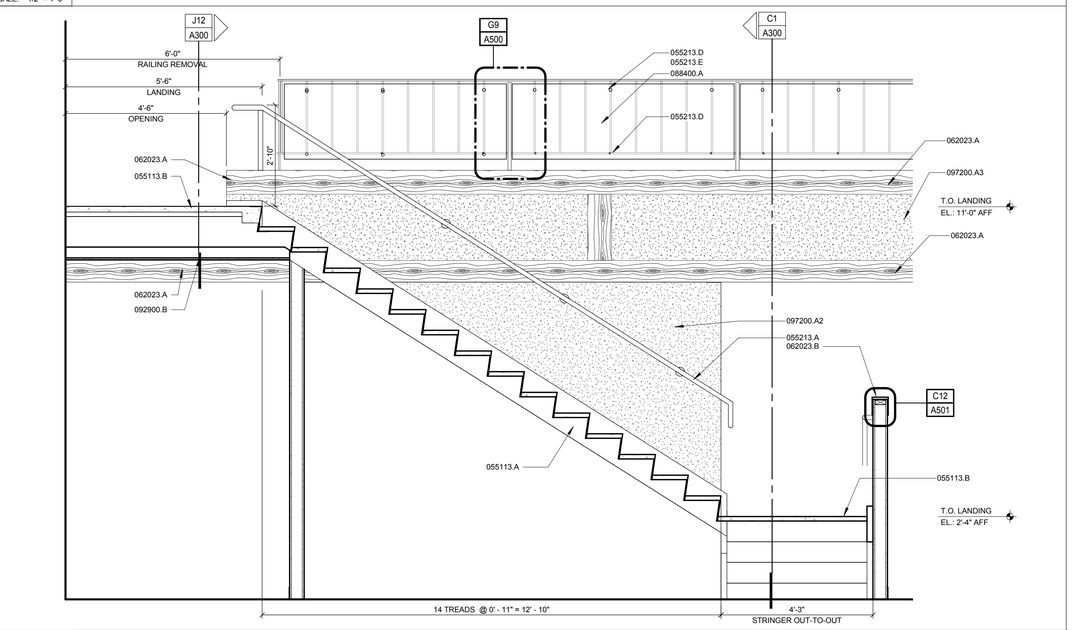

C5 SOUTH STAIR SECTION 1

SCALE: 1/2" = 1'-0"

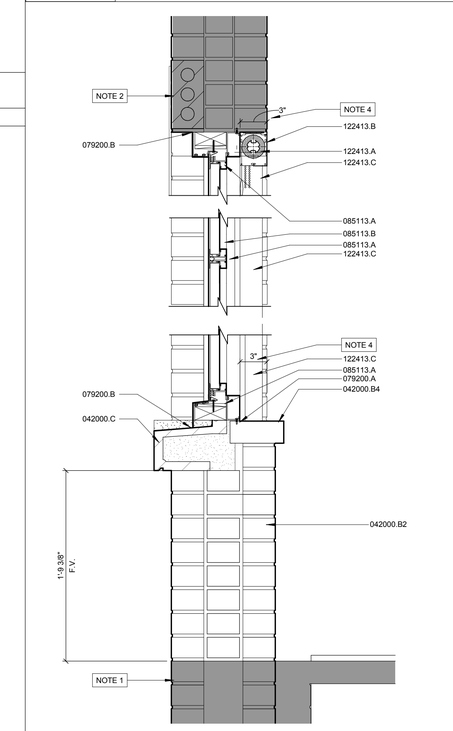

C12 SECTION DETAIL

SCALE: 1 1/2" = 1'-0"

SHEET A300 SHEET SPECIFIC NOTES

NOTE 1	EXISTING MASONRY WALL
NOTE 2	EXISTING MASONRY WALL & LINTEL
NOTE 3	SEE STRUCTURAL FOR TIE-IN TO EXISTING CONSTRUCTION
NOTE 4	COORDINATE WINDOW POSITION WITH DEPTH OF ROLLER SHADE

KEYNOTE LEGEND

042000.B2	BRICK MASONRY INFILL; MATCH EXISTING THICKNESS. TOOTH BRICK VENEER INTO EXISTING
042000.B4	MASONRY SILL TO MATCH EXISTING
042000.C	TERRA-COTTA SILL; MATCH EXISTING PROFILE, COLOR, AND FINISH
055113.A	PREASSEMBLED STEEL STAIRS WITH CONCRETE-FILLED TREADS
055113.B	STEEL PAN LANDING
055213.A	STEEL HANDRAIL, 1-1/4" DIAMETER, WALL-MOUNTED – PAINT FINISH
055213.B	STEEL HANDRAIL, 1-1/4" DIAMETER, FLOOR-MOUNTED – PAINT FINISH
055213.C	STEEL GUARDRAIL; MATCH EXISTING
055213.D	ONE-PIECE ALUMINUM STUD & ½"CAP
055213.E	PROVIDE STANDOFF AT TOP OF PANEL CONNECTION
055213.J	RAILING CONNECTIONS PROVIDED BY STEEL FABRICATOR
055213.K	STEEL HANDRAIL, RETURN TO KNEE-WALL BELOW
061053.C	PROVIDE NAILER FOR WOOD TRIM
062023.A	EXISTING WOOD TRIM; RESTORE DAMAGED OR SOILED AREAS AND TOUCH-UP FINISH AS NEEDED TO ACHIEVE UNIFORM APPEARANCE.

KEYNOTE LEGEND

062023.B	WOOD WALL CAP; MATCH EXISTING PROFILE & FINISH
062023.C	WOOD TRIM; MATCH EXISTING PROFILE & FINISH
079200.A	ELASTOMERIC JOINT SEALANT
079200.B	ELASTOMERIC JOINT SEALANT AND BACKER ROD
085113.A	MANUFACTURED WINDOW PANNING SYSTEM; PROVIDE NEW WOOD WINDOW BUCK TO MATCH EXISTING WINDOW PROFILES
085113.B	GLAZING UNIT
088400.A	MONOLITHIC CLEAR SCRATCH-RESISTANT ACRYLIC GLAZING PANELS; ATTACH TO OUTSIDE FACE OF EXISTING GUARDRAIL ASSEMBLY
088400.B	MONOLITHIC CLEAR SCRATCH-RESISTANT ACRYLIC GLAZING PANEL; ATTACH TO FACE OF GUARDRAIL ASSEMBLY
092216.A	3-5/8" METAL STUD
092216.F	BOX BEAM HEADER
092900.A	5/8" TYPE "X" GYPSUM WALLBOARD
092900.B	½" GYPSUM CEILING BOARD
095113.A	SUSPENDED ACOUSTICAL PANEL CEILING
096513.A	SCHEDULED RESILIENT WALL BASE
097200.A	SCHEDULED WALL COVERING
097200.A1	WALLCOVERING 1

KEYNOTE LEGEND

097200.A2	WALLCOVERING 2
097200.A3	WALLCOVERING 3; WRAP SPECIFIED ACOUSTICAL BOARD
097200.B	ACOUSTICAL BOARD
099123.B	PAINT FINISH; SEE FINISH SCHEDULE
099123.B1	FIELD PAINT, PNT1 – SEE SPECIFICATIONS
122413.A	ROLLER WINDOW SHADE
122413.B	FRONT FASCIA
122413.C	ROOM DARKENING END CHANNELS

REVISIONS:

DESIGN ARCHITECT: Michael P Sinclair
PROJECT ARCHITECT: Michael P Sinclair
DRAWN BY: MPS / AMO
ISSUED: 11/09/2015

PROJECT CONSULTANTS

STRUCTURAL ENGINEER
Voss & Associates, Inc
201 North Cotner Blvd, Suite 200
Lincoln, NE 68505
402-476-9444

MECHANICAL/ELECTRICAL ENGINEERS
Olson Associates
601 Old Cheney Road
Lincoln, NE 68508
402-474-6311

City of Hastings

Hastings City Auditorium Interior Renovation

SINCLAIR hille architects
700 Q St. Lincoln, NE 68508 T: 402 476 7331 F: 402 476 8341

Wall & Stair Sections

SHA PROJECT NO. 15011

A300

© Copyright SINCLAIR HILLE ARCHITECTS

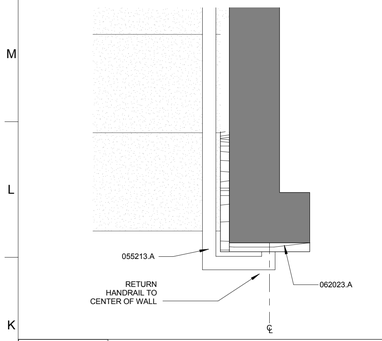

K1 PLAN DETAIL

SCALE: 1 1/2" = 1'-0" HANDRAIL RETURN

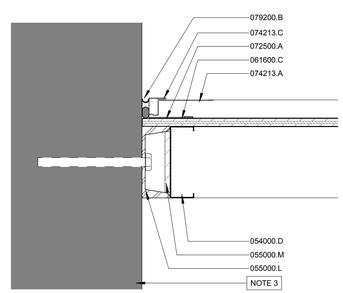

K3 PLAN DETAIL

SCALE: 3" = 1'-0" CHASE FRAMING

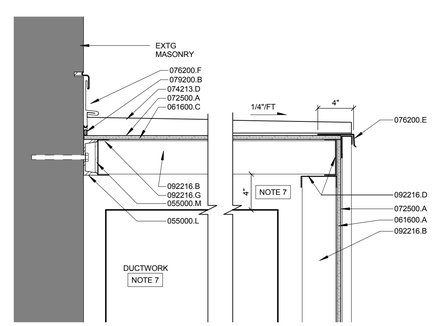

K6 SECTION DETAIL

SCALE: 1 1/2" = 1'-0" CHASE TOP FRAMING

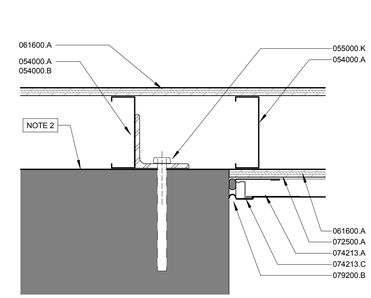

K9 PLAN DETAIL

SCALE: 3" = 1'-0" MECHANICAL CHASE AT EXISTING WALL

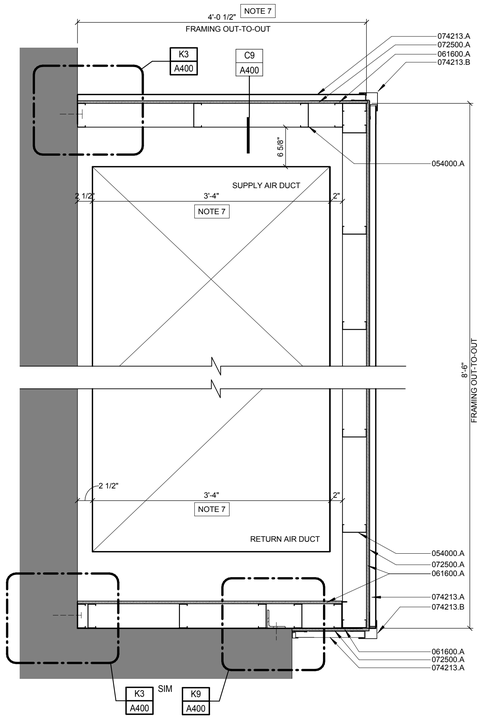

G12 PLAN DETAIL

SCALE: 1" = 1'-0" MECHANICAL DUCT CHASE (2 TOTAL)

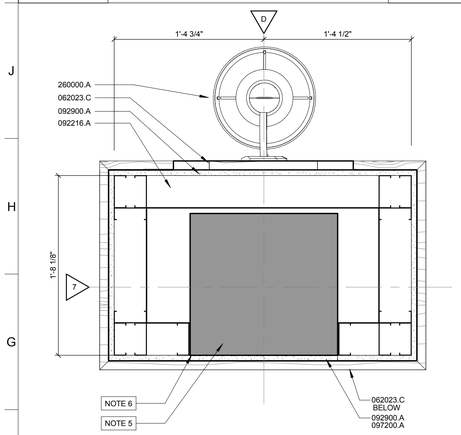

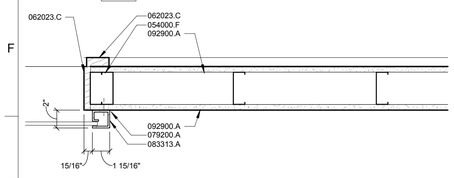

E1 PLAN DETAIL

SCALE: 1 1/2" = 1'-0" COLUMN FURRING

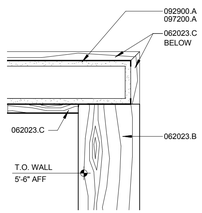

F3 PLAN DETAIL

SCALE: 1 1/2" = 1'-0" WALL HEIGHT TRANSITION

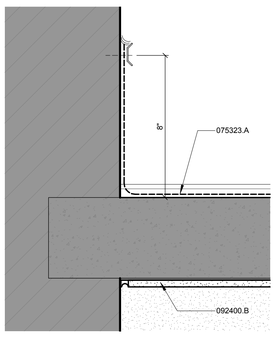

C3 SECTION DETAIL

SCALE: 3" = 1'-0"

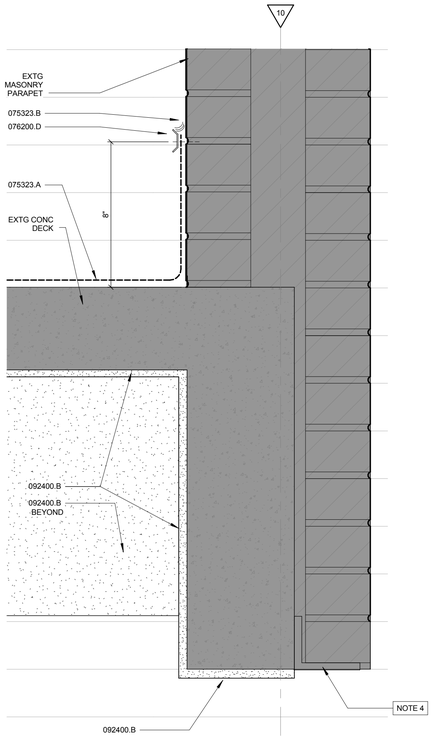

C5 SECTION DETAIL

SCALE: 3" = 1'-0" PORTICO ROOF AT EXTERIOR WALL

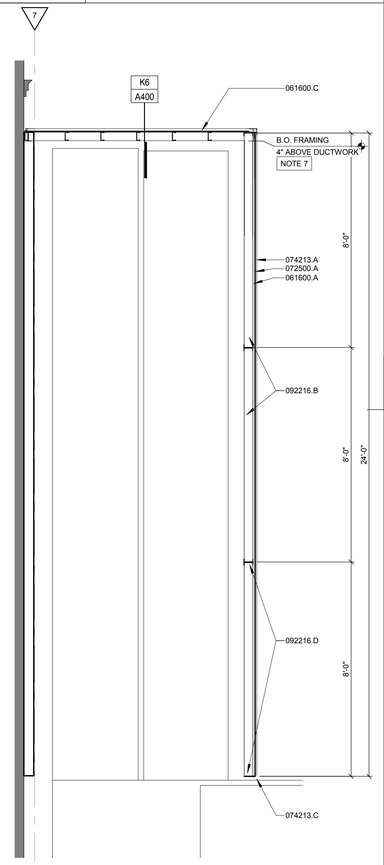

C9 SETCION DETAIL

SCALE: 3/8" = 1'-0" MECHANICAL CHASE

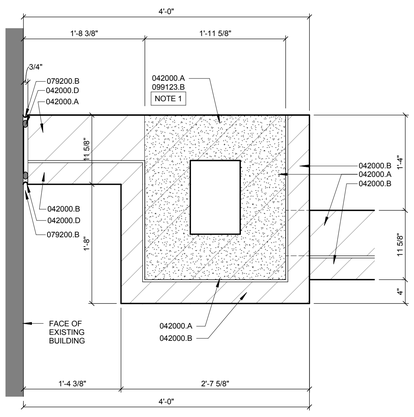

C12 PLAN DETAIL

SCALE: 1" = 1'-0" MASONRY PIER

SHEET A400 SHEET SPECIFIC NOTES

NOTE 1	GROUT CELLS OF CMU AT PIERS SOLID
NOTE 2	ALIGN FACE OF STUD WITH EXISTING MASONRY
NOTE 3	EXISTING MASONRY WALL
NOTE 4	EXISTING SHELF ANGLE
NOTE 5	EXISTING COLUMN CONSTRUCTION
NOTE 6	ALIGN FRAMING WITH FACE OF EXISTING COLUMN
NOTE 7	CONFIRM DUCT SIZES AND REQUIRED CLEARENCES WITH MECHANICAL
NOTE 8	EXTG GUARDRAIL

KEYNOTE LEGEND

042000.A	8" CMU
042000.B	BRICK VENEER
042000.D	PROVIDE RAKED JOINT FOR BACKER ROD AND SEALANT
054000.A	4" – 20 GAUGE STUDS @ 16" O.C.
054000.B	SHOOT STUD WEB TO ANGLE @ 12"
054000.D	4" – 20 GAUGE STUD. SHOOT WEB TO1/4" PLATES ON CHANNELW/ 2 –ANCHORS @ EACH PLATE.
054000.F	3-5/8" – 14 GAUGE STUDS, BACK TO BACK; CONFIRM REQUIREMENTS WITH COILING COUNTER DOOR MANUFACTURER
055000.K	L3x3x1/4x7'-0" AT EACH 8'-0" WALL LIFT. BOLT TO EXISTING MASONRY W/ ½" DIAx7" EMBED ADHESIVE GROUTED BOLTS W/ SLEEVES @ 2'-0"
055000.L	C4x5.4x8'-0". BOLT TO EXISTING MASONRY W/ ½" DIA x 7" EMBED ADHESIVE GROUTED BOLTS W/ SLEEVES @ 2'-0"
055000.M	¼ x 6" PLATE @ 2'-0" CENTERED BETWEEN BOLTS. SHOPWELD FLUSH TO CHANNEL FLANGES
055213.A	STEEL HANDRAIL, 1-1/4" DIAMETER, WALL-MOUNTED – PAINT FINISH
061600.A	7/16" OSB SHEATHING. VERTICAL AND HORIZONTAL PANEL JOINTS SHALL FALL OVER FRAMING. SCREW SHEATHING TO FRAMING WITH #10 SCREWS @ 6" O.C.

KEYNOTE LEGEND

061600.C	5/8" OSB SHETAHING. ATTACH TO CHANNEL FLANGE WITH SHOT ANCHORS @ 6" O.C.
062023.A	EXISTING WOOD TRIM; RESTORE DAMAGED OR SOILED AREAS AND TOUCH-UP FINISH AS NEEDED TO ACHIEVE UNIFORM APPEARANCE.
062023.B	WOOD WALL CAP; MATCH EXISTING PROFILE & FINISH
062023.C	WOOD TRIM; MATCH EXISTING PROFILE & FINISH
072500.A	BUILDING WRAP
074213.A	METAL LINER PANEL
074213.B	PREFINISHED CORNER FLASHING
074213.C	PREFINISHED "J" CHANNEL
074213.D	STANDING SEAM ROOFING
075323.A	EPDM FLEECEBACK ROOFING SYSTEM
075323.B	SEALANT
076200.B	NEW GUTTER; TIE IN TO EXISTING DOWNSPOUT
076200.D	TERMINATION BAR
076200.E	SHEET METAL FASCIA AND CONTINUOUS GALVANIZED CLEAT

KEYNOTE LEGEND

076200.F	TWO PIECE FLASHING AND REGLET INTO EXISTING MASONRY
079200.A	ELASTOMERIC JOINT SEALANT
079200.B	ELASTOMERIC JOINT SEALANT AND BACKER ROD
083313.A	COILING COUNTER DOOR
092216.A	3-5/8" METAL STUD
092216.B	4" – 20 GAUGE STUDS @ 16" O.C.
092216.D	4" – 14 GAUGE TRACK
092216.G	4"-14 GA TRACK. SHOOT WEB TO ¼" PLATES ON CHANNEL W/2 ANCHORS AT EACH PLATE
092400.B	NEW EXTERIOR PLASTERWORK ON UNDERSIDE OF PORTICO ROOF
092900.A	5/8" TYPE "X" GYPSUM WALLBOARD
097200.A	SCHEDULED WALL COVERING
099123.B	PAINT FINISH; SEE FINISH SCHEDULE
260000.A	RELOCATED WALL SCONCE FROM SALVAGE

REVISIONS:

DESIGN ARCHITECT: Michael P Sinclair
PROJECT ARCHITECT: Michael P Sinclair
DRAWN BY: MPS
ISSUED: 11/09/2015

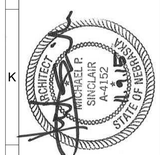

PROJECT CONSULTANTS

STRUCTURAL ENGINEER
Voss & Associates, Inc
201 North 8th Street, Suite 200
Lincoln, NE 68508
402-476-6064

MECHANICAL/ELECTRICAL ENGINEERS
Olson Associates
601 Old Cheney Road, Suite 200
Lincoln, NE 68508
402-474-5011

City of Hastings

Hastings City Auditorium Interior Renovation

SINCLAIR hille architects
700 Q St. Lincoln, NE 68508 T: 402 476 7331 F: 402 476 8341

Plan and Section Details

SHA PROJECT NO. 15011

A400

© Copyright SINCLAIR HILLE ARCHITECTS

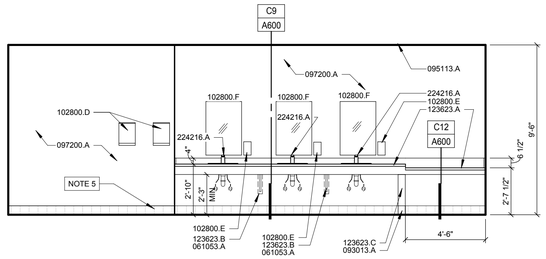

K1 INTERIOR ELEVATION

SCALE: 1/4" = 1'-0" | MEN'S RESTROOM

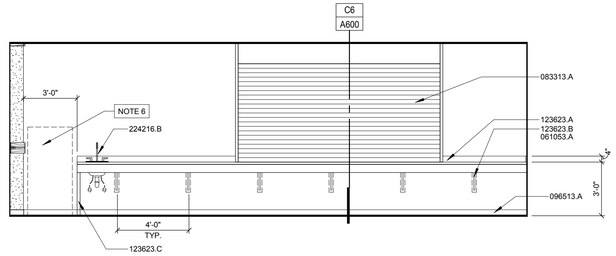

K4 INTERIOR ELEVATION

SCALE: 1/4" = 1'-0" | NORTH WALL - BAR/STORAGE

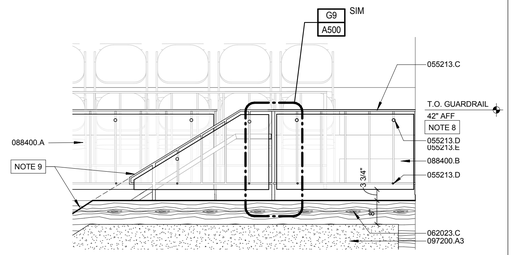

K9 ELEVATION DETAIL

SCALE: 1/2" = 1'-0" | GUARDRAIL AT STAIR LANDING

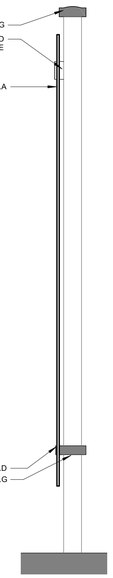

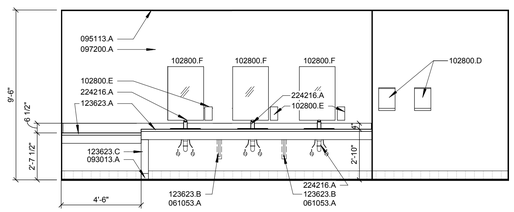

G1 INTERIOR ELEVATION

SCALE: 1/4" = 1'-0" | WOMEN'S RESTROOM

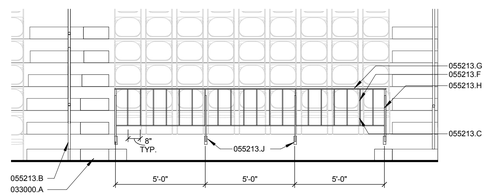

G4 ELEVATION DETAIL

SCALE: 1/4" = 1'-0" | PLEXIGLASS RAILING ELEVATION

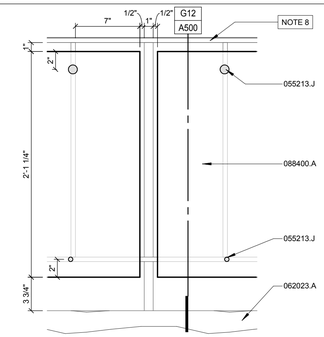

G9 DETAIL

SCALE: 1 1/2" = 1'-0" | -

G12 DETAIL

SCALE: 3" = 1'-0" | PLEXIGLASS/GUARDRAIL ELEVATION

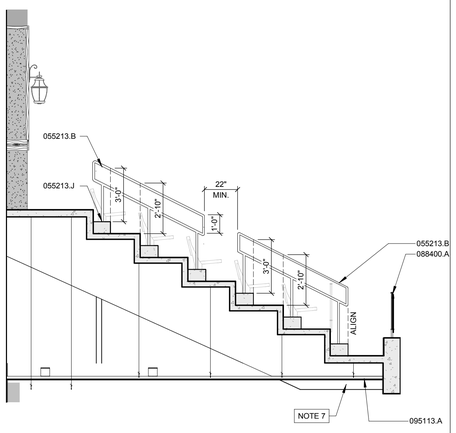

C4 SECTION DETAIL

SCALE: 1/4" = 1'-0" | CENTER AISLE HANDRAIL

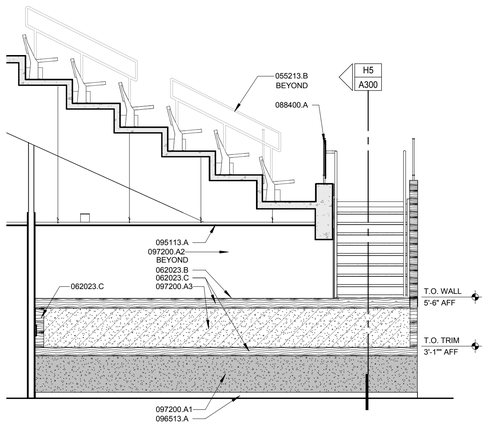

C7 ELEVATION DETAIL

SCALE: 1/4" = 1'-0" | PILASTER- GROUND FLOOR

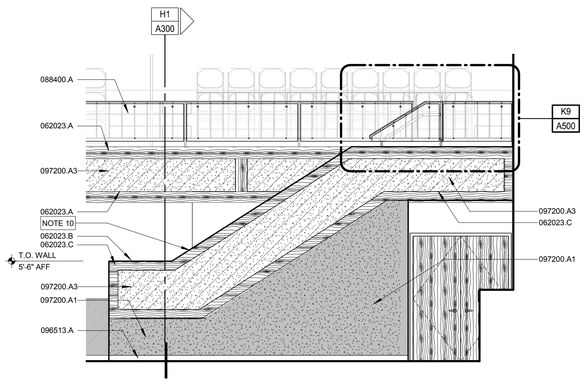

C10 ELEVATION DETAIL

SCALE: 1/4" = 1'-0" | PILASTER- UPPER BALCONY

SHEET A500 SHEET SPECIFIC NOTES

NOTE 1	EXISTING TRIM ON PILASTERS TO REMAIN
NOTE 2	EXISTING LIGHT FIXTURE TO REMAIN.
NOTE 3	REMOVE EXISTING WALLCOVERING TO PREPARE FOR NEW FINISHES
NOTE 4	EXISTING WOOD MILLWORK TO REMAIN.
NOTE 5	EXISTING QUARRY TILE BASE
NOTE 6	ICE MAKER PROVIDED BY TENANT; GC TO INSTALL. SEE MECHANICAL FOR CONNECTS.
NOTE 7	PAINT RAKER
NOTE 8	FIELD VERIFY TO MATCH EXISTING
NOTE 9	ALIGN TOP OF GUARDRAIL WITH TOP OF WING WALL
NOTE 10	TOP OF WING WALL TO BE 42" ABOVE STAIR NOSING

KEYNOTE LEGEND

033000.A	EXTEND EXISTING CONCRETE STEP TO FILL VOID REMAINING FROM REMOVAL OF FIXED SEAT; MATCH EXISTING PROFILE – SEE STRUCTURAL
055213.B	STEEL HANDRAIL, 1-1/4" DIAMETER, FLOOR-MOUNTED – PAINT FINISH
055213.C	STEEL GUARDRAIL; MATCH EXISTING
055213.D	ONE-PIECE ALUMINUM STUD & ½"CAP
055213.E	PROVIDE STANDOFF AT TOP OF PANEL CONNECTION
055213.F	½" SQUARE STEEL PICKET
055213.G	½" x 1-1/2" STEEL HORIZONTAL BAR
055213.H	1" SQUARE STEEL POST
055213.J	RAILING CONNECTIONS PROVIDED BY STEEL FABRICATOR
061053.A	WOOD BLOCKING
062023.A	EXISTING WOOD TRIM; RESTORE DAMAGED OR SOILED AREAS AND TOUCH-UP FINISH AS NEEDED TO ACHIEVE UNIFORM APPEARANCE.
062023.B	WOOD WALL CAP; MATCH EXISTING PROFILE & FINISH
062023.C	WOOD TRIM; MATCH EXISTING PROFILE & FINISH
083313.A	COILING COUNTER DOOR
088400.A	MONOLITHIC CLEAR SCRATCH-RESISTANT ACRYLIC GLAZING PANELS; ATTACH TO OUTSIDE FACE OF EXISTING GUARDRAIL ASSEMBLY

KEYNOTE LEGEND

088400.B	MONOLITHIC CLEAR SCRATCH-RESISTANT ACRYLIC GLAZING PANEL; ATTACH TO FACE OF GUARDRAIL ASSEMBLY
093013.A	QUARRY TILE BASE; MATCH EXISTING
095113.A	SUSPENDED ACOUSTICAL PANEL CEILING
096513.A	SCHEDULED RESILIENT WALL BASE
097200.A	SCHEDULED WALL COVERING
097200.A1	WALLCOVERING 1
097200.A2	WALLCOVERING 2
097200.A3	WALLCOVERING 3; WRAP SPECIFIED ACOUSTICAL BOARD
102800.D	AUTOMATIC HAND DRYER
102800.E	LIQUID-SOAP DISPENSER
102800.F	MIRROR
123623.A	PLASTIC-LAMINATE-CLAD COUNTERTOP WITH BACKSPLASH, SIDESPLASH, & FRONT APRON
123623.B	SUPPORT BRACKET
123623.C	PLASTIC-LAMINATE CLAD SUPPORT WALL
224216.A	LAVATORY & FAUCET; SEE MECHANICAL
224216.B	SINGLE BOWL SINK & FAUCET; SEE MECHANICAL

REVISIONS:

DESIGN ARCHITECT: Michael P Sinclair
PROJECT ARCHITECT: Michael P Sinclair
DRAWN BY: MPS / AMO
ISSUED: 11/09/2015

MICHAEL P. SINCLAIR A-4152 11-9-15 ARCHITECT STATE OF NEBRASKA

PROJECT CONSULTANTS

STRUCTURAL ENGINEER
Voss & Associates, Inc
201 North Cotner Blvd, Suite 200
Lincoln, NE 68505
402-476-6645

MECHANICAL/ELECTRICAL ENGINEERS
Olson Associates
601 Old Cheney Road, Suite 30
Lincoln, NE 68508
402-474-5011

City of Hastings

Hastings City Auditorium Interior Renovation

SINCLAIR hille architects
700 Q St. Lincoln, NE 68508 T: 402 476 7331 F: 402 476 8341

Interior Elevations

SHA PROJECT NO. 15011

A500

© Copyright SINCLAIR HILLE ARCHITECTS

DOOR SCHEDULE

Door No.	Door Size	F.R.	DOOR Elev.	DOOR Mat'l	DOOR Fin.	FRAME Type	FRAME Mat'l	FRAME Fin.	Hdwr. Set	NOTES	Door No.
001	3'-0" x 7'-0" EXTG		-	-	-	-	-	-	8	1	001
002	3'-0" x 7'-0" EXTG		-	-	-	-	-	-	8	1	002
101	3'-0" x 7'-0"	60 MIN	F	WD	STN	HM-1	HM	PNT	9		101
102	3'-0" x 7'-0" EXTG		-	-	-	-	-	-	1	1	102
103	3'-0" x 7'-0" EXTG		-	-	-	-	-	-	1	1	103
104	3'-0" x 7'-0" EXTG		-	-	-	-	-	-	1	1	104
105	PAIR 3'-0" x 7'-0" EXTG		-	-	-	-	-	-	5	1	105
106	PAIR 3'-0" x 7'-0"	45 MIN	F	WD	STN	HM-1	HM	PNT	3		106
108	3'-0" x 7'-0"		F	WD	STN	HM 1	HM	PNT	1		108
109	PAIR 3'-0" x 7'-0" EXTG		-	-	-	-	-	-	5	1	109
110	3'-0" x 7'-0"		-	-	-	-	-	-	(none)	2	110
110B	PAIR 3'-0" x 7'-0" EXTG		-	-	-	-	-	-	5	1	110B
111A	PAIR 3'-0" x 7'-0"	60 MIN	V	WD	STN	HM-1	HM	PNT	4		111A
111B	PAIR 3'-0" x 7'-0"	60 MIN	V	WD	STN	HM-1	HM	PNT	4		111B
111C	PAIR 3'-0" x 7'-0"	60 MIN	V	WD	STN	HM-1	HM	PNT	4		111C
111D	PAIR 3'-0" x 7'-0"	60 MIN	V	WD	STN	HM-1	HM	PNT	4		111D
111E	PAIR 3'-0" x 7'-0" EXTG		-	-	-	-	-	-	2	1	111E
111F	PAIR 3'-0" x 7'-0" EXTG		-	-	-	-	-	-	5	1	111F
111G	PAIR 3'-0" x 7'-0" EXTG		-	-	-	-	-	-	2	1	111G
112	3'-0" x 7'-0"	45 MIN	F	WD	STN	HM 1	HM	PNT	3	5	112
114	PAIR 2'-6" x 7'-0" EXTG		-	-	-	-	-	-	5	1	114
115	3'-0" x 7'-0" EXTG		-	-	-	-	-	-	1	1	115
116	2'-0" x 7'-0" EXTG			-	-	-	-	-	1	1	116
117	3'-0" x 7'-0"	60 MIN	F	WD	STN	HM-1	HM	PNT	9		117
118	3'-0" x 7'-0" EXTG		-	-	-	-	-	-	1	1	118
121	3'-0" x 7'-0" EXTG		-	-	-	-	-	-	11	1	121
122	3'-0" x 7'-0" EXTG		-	-	-	-	-	-	10	1	122
123	3'-0" x 7'-0" EXTG		-	-	-	-	-	-	12	1	123
125	2'-0" x 7'-0" EXTG			-	-	-	-	-	12	1	125
201A	3'-0" x 7'-0"	60 MIN	F	WD	STN	HM-1	HM	PNT	6		201A
201B	PAIR 3'-0" x 7'-0"	60 MIN	V	WD	STN	HM-1	HM	PNT	7		201B
201C	3'-0" x 7'-0"	60 MIN	F	WD	STN	HM-1	HM	PNT	1		201C
201D	3'-0" x 7'-0"	60 MIN	F	WD	STN	HM-1	HM	PNT	6		201D
304	3'-0" x 7'-0" EXTG		-	-	-	-	-	-	13	1	304
305	3'-0" x 7'-0" EXTG		-	-	-	-	-	-	13	1	305
306	3'-0" x 7'-0" EXTG		-	-	-	-	-	-	12	1	306
307	3'-0" x 7'-0" EXTG		-	-	-	-	-	-	12	1	307
400	3'-0" x 7'-0" EXTG		-	-	-	-	-	-	8	1	400

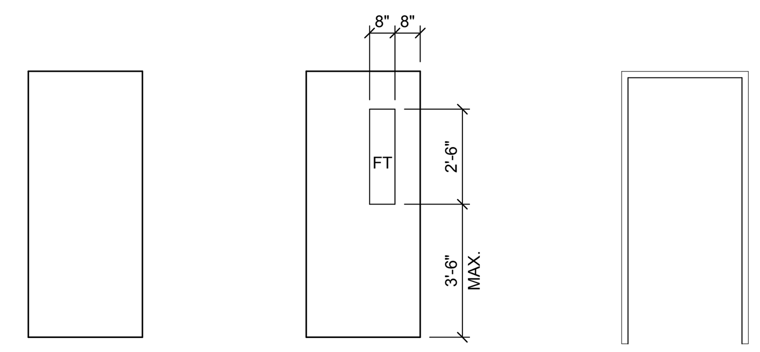

F
081416.A

V
081416.A
088000.A

HM-1
081213.A

DOOR SCHEDULE NOTES

1 EXISTING DOOR TO REMAIN; TOUCH-UP PAINT AND STAIN FINISH AS REQUIRED TO ACHIEVE A CONSISTANT LEVEL OF FINISH
2 DOOR/HARDWARE PROVIDED BY MOVABLE WALL MANUFACTURER

J1 DOOR SCHEDULE, DOOR & FRAME TYPES

SCALE: 1/4" = 1'-0"

ROOM FINISH SCHEDULE

No.	Name	Floor Finish	Base	North Wall Material	North Wall Finish	East Wall Material	East Wall Finish	South Wall Material	South Wall Finish	West Wall Material	West Wall Finish	Ceiling Material	Ceiling Finish	NOTES	No.
100	LOBBY	EXTG	EXTG	GWB	WC2	GWB	WC2	GWB	WC2	GWB	WC2/PNT	APC		4, 6	100
101	MEN	EXTG	EXTG/QT	GWB	WC2	EXTG	PNT	GWB	WC2 \ PNT	GWB	WC2	APC		10, 11	101
102	JAN	EXTG	EXTG	EXTG	EXTG	EXTG	EXTG	EXTG	EXTG	EXTG	EXTG	EXTG			102
103	CLOSET	EXTG	EXTG	EXTG	EXTG	EXTG	EXTG	EXTG	EXTG	EXTG	EXTG	EXTG			103
104	KITCHEN	VCT1	VWB1	GWB	EXTG	GWB	EXTG	GWB	EXTG	GWB	EXTG	EXTG		1	104
105	STAIR 1	EXTG	VWB1	GWB	WC2	GWB	WC2	GWB	WC2	GWB	WC2	APC			105
106	STORAGE	EXTG	VWB1	GWB	PNT1	EXTG	PNT1	GWB	PNT1	GWB	PNT1	APC			106
107	ALCOVE	EXTG	VWB1	GWB	WC1/2	EXTG	PNT1/2			GWB	WC1/2	APC		3	107
108	CORRIDOR	EXTG	VWB1	GWB	WC2	EXTG	PNT1/2	EXTG	PNT1	GWB	PNT1	APC		6, 8	108
109	STAIR 2	EXTG	VWB1	GWB	WC2	GWB	WC2	GWB	WC2	GWB	WC2	APC			109
110	MEETING RM	EXTG	VWB1	-	-	GWB	WC1/2	GWB	WC1/2	-	-	APC		3, 6, 9	110
111	AUDITORIUM	EXTG	VWB1	GWB	WC/PNT	EXTG	PNT	GWB	WC/PNT	GWB	WC	APC		3, 5, 6, 7	111
112	BAR / STORAGE	EXTG	VWB1	GWB	PNT1	GWB	WC2	GWB	WC2	GWB	WC2	APC		6	112
114	STAIR	EXTG	EXTG	EXTG	PNT1	EXTG	PNT1	EXTG	PNT1	EXTG	PNT1	EXTG			114
115	CLO	EXTG	EXTG	EXTG	EXTG	EXTG	EXTG	EXTG	EXTG	EXTG	EXTG	-			115
116	CLO	EXTG	EXTG	EXTG	EXTG	EXTG	EXTG	EXTG	EXTG	EXTG	EXTG	-			116
117	WOMEN	EXTG	EXTG	GWB	WC2	EXTG	PNT1	GWB	WC2	GWB	WC2	APC		11	117
118	JAN	EXTG	EXTG	EXTG	EXTG	EXTG	EXTG	EXTG	EXTG	EXTG	EXTG	-			118
119	STAGE	EXTG	EXTG	EXTG	EXTG	EXTG	EXTG	EXTG	EXTG	EXTG	EXTG	-			119
121	DRESSING RM	VCT1	VWB1	EXTG	PNT1	EXTG	PNT1	EXTG	PNT1	EXTG	PNT1	APC			121
122	DRESSING RM	VCT1	VWB1	EXTG	PNT1	EXTG	PNT1	EXTG	PNT1	EXTG	PNT1	APC			122
123	TLT	VCT1	VWB1	EXTG	PNT1	EXTG	PNT1	EXTG	PNT1	EXTG	PNT1	APC			123
125	TLT	VCT1	VWB1	EXTG	PNT1	EXTG	PNT1	EXTG	PNT1	EXTG	PNT1	APC			125
200	BALCONY	EXTG	VWB1	EXTG	WC/PNT	EXTG	PNT	EXTG	WC \ PNT	EXTG	WC/PNT	APC		6, 7	200
201	UPPER LOBBY	MFS	EXTG	EXTG	PNT1	EXTG	PNT1	EXTG	PNT1	EXTG	PNT1	-			201
300	UPPER BOWL	EXTG	VWB1	EXTG \ GWB	PNT			EXTG \ GWB	WC \ PNT	EXTG	PNT	APC		6, 7	300
301	PROJECTOR ROOM	EXTG	EXTG	EXTG	EXTG	EXTG	EXTG	EXTG	EXTG	EXTG	EXTG	EXTG			301
302	EXIT RAMP 1	EXTG	VWB	EXTG	PNT			EXTG	PNT			APC		3	302
303	EXIT RAMP 2	EXTG	VWB	EXTG	PNT			EXTG	PNT			APC		3	303
304	DRESSING RM	VCT1	VWB1	EXTG	PNT1	EXTG	PNT1	EXTG	PNT1	EXTG	PNT1	APC			304
305	DRESSING RM	VCT1	VWB1	EXTG	PNT1	EXTG	PNT1	EXTG	PNT1	EXTG	PNT1	APC			305
306	TLT														306
307	TLT														307
400	ATTIC	EXTG	EXTG	EXTG	EXTG	EXTG	EXTG	EXTG	EXTG	EXTG	EXTG	-		2	400

ROOM FINISH SCHEDULE NOTES

1 PROVIDE VINYL FLOOR PROTECTANT; SEE SPECIFICATIONS
2 PATCH AND REPAIR PLASTER FLOOR ASSEMBLY AS REQUIRED TO MAINTAIN 1 HOUR FIRE RATING
3 SEE DETAILS AND ELEVATIONS FOR FINISH EXTENTS
4 REMOVE AND REINSTALL WOOD BATTEN WALLCOVERING TERMINATION AS REQUIRED
5 PAINT RISER (VERTICAL) PORTION OF MOVABLE STAIR RISER PNT1
6 REINSTALL ALL WOOD TRIM, CASING, AND CROWN MOULDING REMOVED TO ACCOMMODATE NEW WALLCOVERING. TOUCH-UP FINISH AS NEEDED TO ACHIEVE SEAMLESS APPEARENCE.
7 ALL COLUMNS AND PILASTERS TO RECEIVE NEW WALL COVERING. SEE SHEET A501 FOR TYPICAL EXTENTS.
8 COLUMNS TO RECEIVE PAINT FINISH; MAINTAIN WOOD TRIM
9 SEE SPECIFICATIONS FOR FOLDING WALL FINISH
10 QUARRY TILE AT NEW CMU WALL AND COUNTER SUPPORT WALLS
11 PAINT CMU WALLS PNT1

096513 RESILIENT WALL BASE AND ACCESSORIES

VWB1 MFR: JOHNSONITE (OR APPROVED EQUAL)
SIZE: 4" COVE
COLOR: BLACK

096519 RESILIENT TILE FLOORING

VCT1 MFR: MANNINGTON COMMERCIAL
STYLE: ESSENTIALS
COLOR: FLAX 143
SIZE: 12"x12"

097200 WALL COVERINGS

VWC1 MFR: MDC
STYLE: "HYPE"
COLOR: W2HY27/4532 LEOPARD
LOCATION: BELOW CHAIR RAIL

VWC2 MFR: MDC
STYLE: "HYPE"
COLOR: W2HY31/4532 HEIRLOOM GOLD
LOCATION: ABOVE CHAIR RAIL AND BEHIND RESTROOM COUNTERS

APWC-1 MFR: NATIONAL WALLCOVERING
STYLE: "VERTICAL INTERIOR SOLUTION"
COLOR: CRYPTON VEX-09 ANGORA
LOCATION: BALCONY RAILING WALL

099123 INTERIOR PAINTING

PNT1 FIELD
MFR: SHERWIN WILLIAMS
COLOR: PRAIRIE GRASS SW7546
FINISH: EGGSHELL

PNT2 ACCENT
MFR: SHERWIN WILLIAMS
COLOR: PIER SW7545
FINISH: EGGSHELL

123623 PLASTIC-LAMINATE-CLAD COUNTERTOPS

PLAM1 COUNTERTOPS
MFR: WILSONART
SERIES: CANYON PASSAGE 1842K-45-HD

G8 ROOM FINISH SCHEDULE

SCALE: 1/4" = 1'-0"

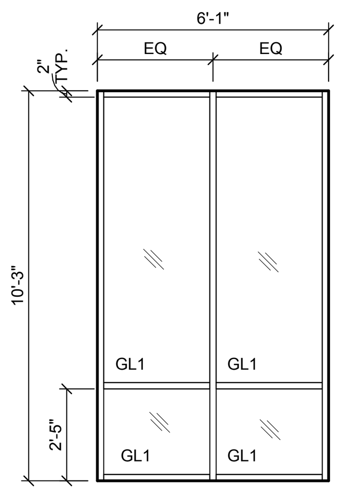

085113.A / 085113.B
FIELD VERIFY ALL EXISTING WOOD FRAME DIMENSIONS

AL1

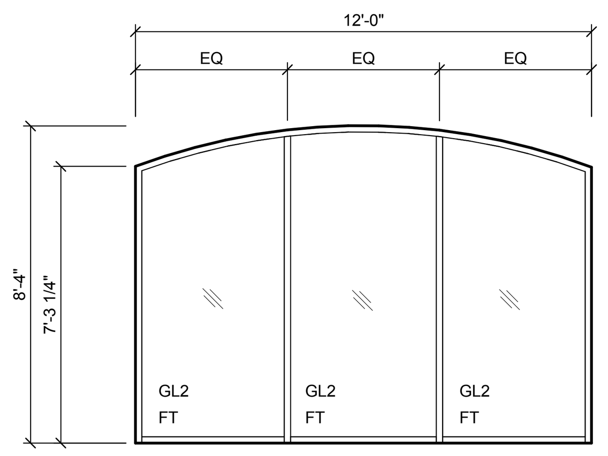

085113.A
FIELD VERIFY ALL EXISTING WOOD FRAME DIMENSIONS

AL2

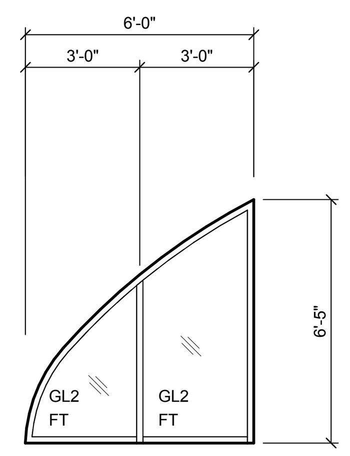

085113.A
FIELD VERIFY ALL EXISTING WOOD FRAME DIMENSIONS

AL3

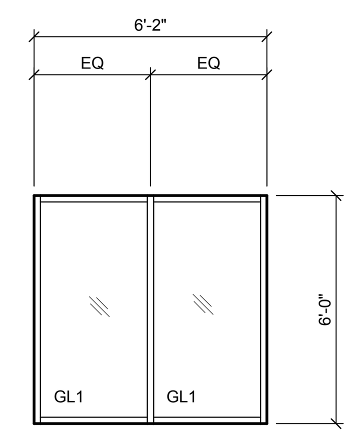

085113.A
FIELD VERIFY ALL EXISTING WOOD FRAME DIMENSIONS

AL4

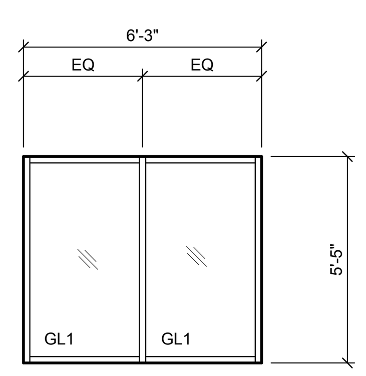

085113.A
FIELD VERIFY ALL EXISTING WOOD FRAME DIMENSIONS

AL5

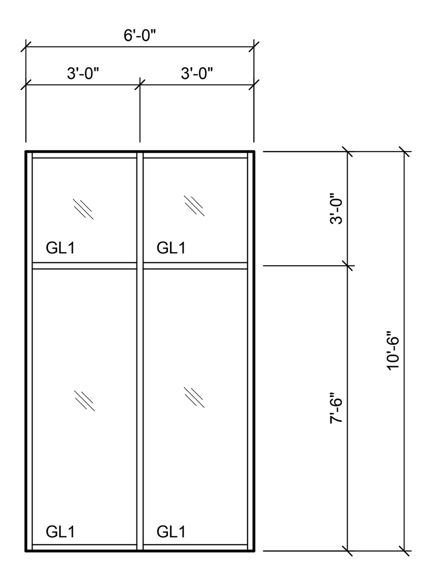

085113.A
FIELD VERIFY ALL EXISTING WOOD FRAME DIMENSIONS

AL6

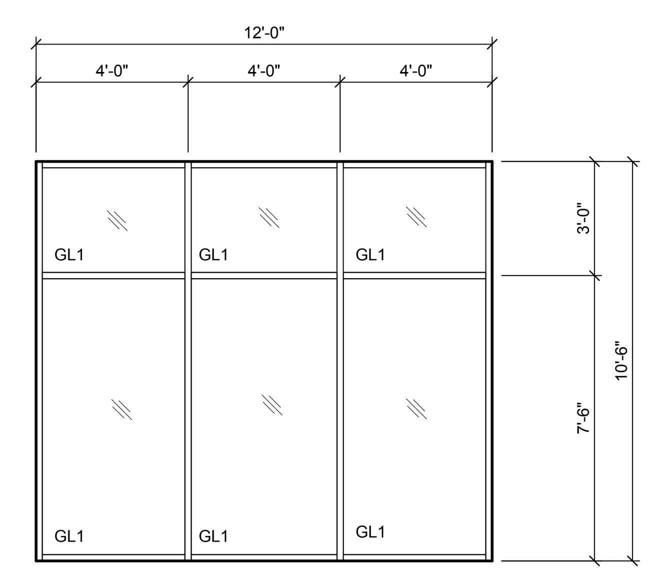

085113.A
FIELD VERIFY ALL EXISTING WOOD FRAME DIMENSIONS

AL7

C1 ALUMINUM WINDOW /PANNING SYSTEM TYPES

SCALE: 1/4" = 1'-0"

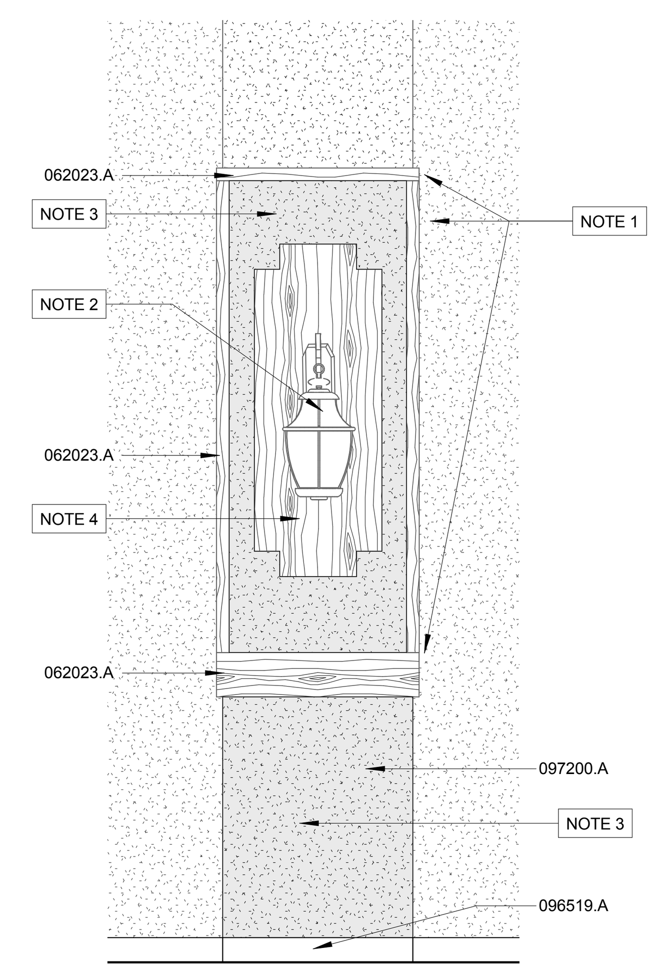

C8 ELEVATION DETAIL

SCALE: 1/2" = 1'-0"
SECOND FLOOR PILASTER

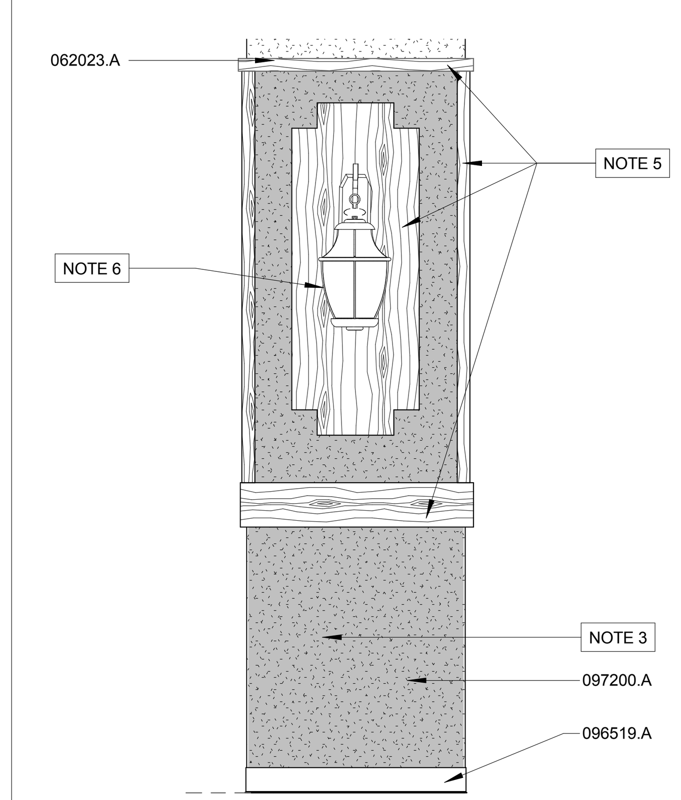

C10 ELEVATION DETAIL

SCALE: 1/2" = 1'-0"
FIRST FLOOR PILASTER

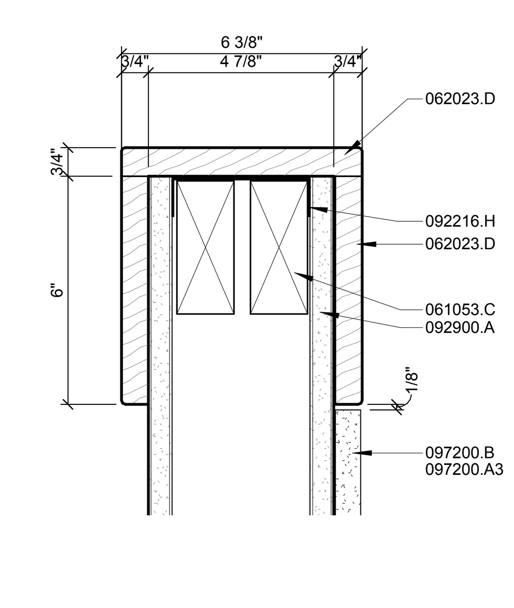

C12 TRIM DETAIL

SCALE: 3" = 1'-0"
-

SHEET A501 SHEET SPECIFIC NOTES

NOTE 1 EXISTING TRIM ON PILASTERS TO REMAIN
NOTE 2 EXISTING LIGHT FIXTURE TO REMAIN.
NOTE 3 REMOVE EXISTING WALLCOVERING TO PREPARE FOR NEW FINISHES
NOTE 4 EXISTING WOOD MILLWORK TO REMAIN.
NOTE 5 REPLACE SALVAGED MILL WORK
NOTE 6 REPLACE SALVAGED LIGHT FIXTURE

KEYNOTE LEGEND

061053.C PROVIDE NAILER FOR WOOD TRIM
062023.A EXISTING WOOD TRIM; RESTORE DAMAGED OR SOILED AREAS AND TOUCH-UP FINISH AS NEEDED TO ACHIEVE UNIFORM APPEARANCE.
062023.D WOOD TRIM; RIFT-CUT RED OAK, EASE EDGES
081213.A INTERIOR HOLLOW METAL FRAME
081416.A SOLID CORE FLUSH SLAB WOOD DOOR
085113.A MANUFACTURED WINDOW PANNING SYSTEM; PROVIDE NEW WOOD WINDOW BUCK TO MATCH EXISTING WINDOW PROFILES
085113.B GLAZING UNIT
088000.A 60 MINUTE FIRE-RATED VISION LITE
092216.H 3-5/8" METAL RUNNER TRACK
092900.A 5/8" TYPE "X" GYPSUM WALLBOARD
096519.A VINYL COMPOSITION FLOOR TILE
097200.A SCHEDULED WALL COVERING
097200.A3 WALLCOVERING 3; WRAP SPECIFIED ACOUSTICAL BOARD
097200.B ACOUSTICAL BOARD

REVISIONS:

DESIGN ARCHITECT: Michael P Sinclair
PROJECT ARCHITECT: Michael P Sinclair
DRAWN BY: MPS
ISSUED: 11/09/2015

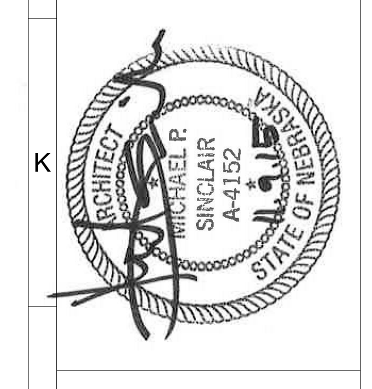

PROJECT CONSULTANTS

STRUCTURAL ENGINEER
Voss & Associates, Inc
201 North 7th Street, Suite 200
Lincoln, NE 68508
402-476-6365

MECHANICAL/ELECTRICAL ENGINEERS
Olsson Associates
601 P Street, Suite 200
Lincoln, NE 68508
402-474-6311

City of Hastings

Hastings City Auditorium Interior Renovation

SINCLAIR hille architects
700 Q St. Lincoln, NE 68508 T: 402 476 7331 F: 402 476 8341

Frame Types, Door Schedule, Room Finish Schedule

SHA PROJECT NO. 15011

A501

© Copyright SINCLAIR HILLE ARCHITECTS

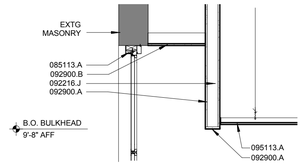

J6 SECTION DETAIL

SCALE: 1/2" = 1'-0" UPPER LOBBY COVE

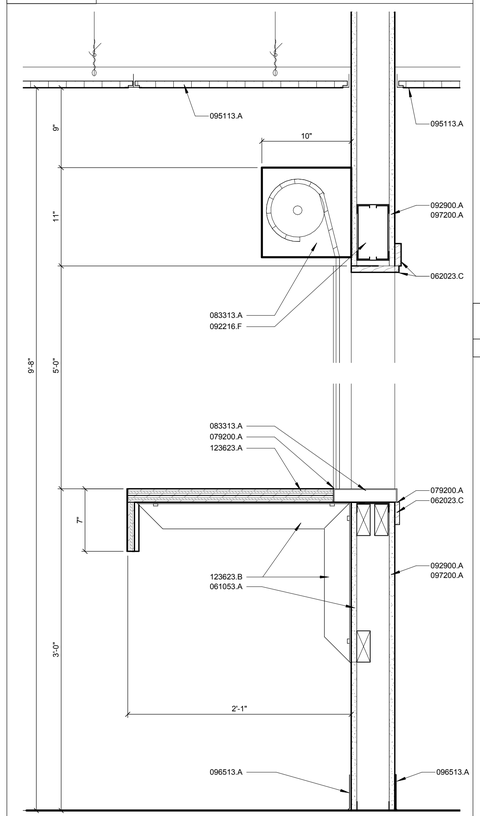

C6 WALL SECTION

SCALE: 1 1/2" = 1'-0" OVERHEAD COILING DOOR

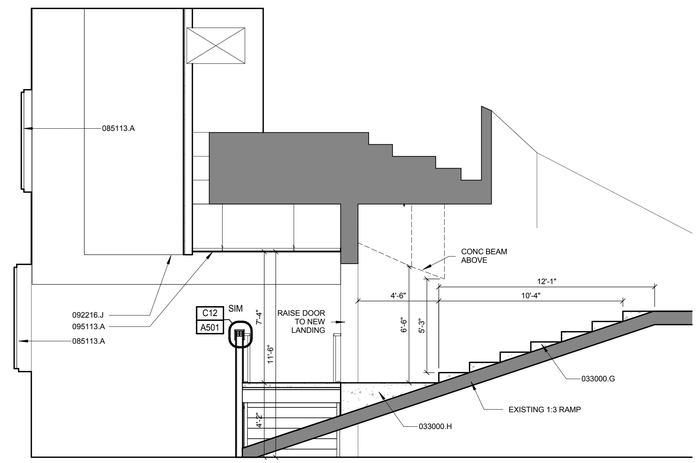

G9 SECTION DETAIL

SCALE: 1/4" = 1'-0" RAMP/STAIR CONVERSION

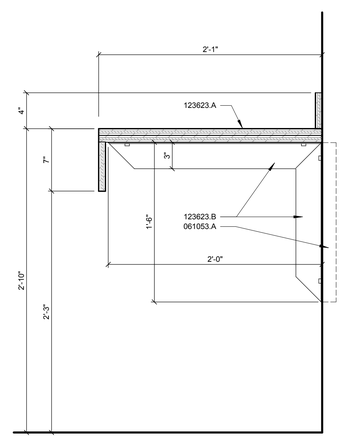

C9 MILLWORK SECTION

SCALE: 1 1/2" = 1'-0" RESTROOM COUNTER @ LAVATORY

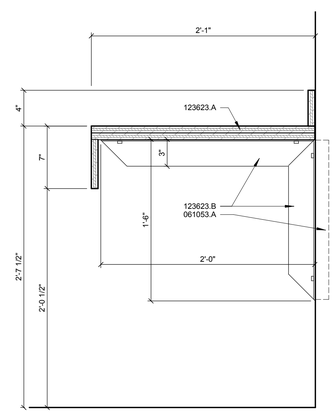

C12 MILLWORK SECTION

SCALE: 1 1/2" = 1'-0" RESTROOM COUNTER @ CHANGING STATION

KEYNOTE LEGEND

033000.G	CONCRETE STEPS
033000.H	CONCRETE LANDING
061053.A	WOOD BLOCKING
062023.C	WOOD TRIM; MATCH EXISTING PROFILE & FINISH
079200.A	ELASTOMERIC JOINT SEALANT
083313.A	COILING COUNTER DOOR
085113.A	MANUFACTURED WINDOW PANNING SYSTEM; PROVIDE NEW WOOD WINDOW BUCK TO MATCH EXISTING WINDOW PROFILES
092216.F	BOX BEAM HEADER
092216.J	BULKHEAD
092900.A	5/8" TYPE "X" GYPSUM WALLBOARD
092900.B	½" GYPSUM CEILING BOARD
095113.A	SUSPENDED ACOUSTICAL PANEL CEILING
096513.A	SCHEDULED RESILIENT WALL BASE
097200.A	SCHEDULED WALL COVERING
123623.A	PLASTIC-LAMINATE-CLAD COUNTERTOP WITH BACKSPLASH, SIDESPLASH, & FRONT APRON
123623.B	SUPPORT BRACKET

REVISIONS:

DESIGN ARCHITECT: Michael P. Sinclair
PROJECT ARCHITECT: Michael P. Sinclair
DRAWN BY: MPS
ISSUED: 11/09/2015

ARCHITECT MICHAEL P. SINCLAIR A-4152 NEBRASKA STATE OF NEBRASKA

PROJECT CONSULTANTS

STRUCTURAL ENGINEER
Voss & Associates, Inc
201 North Cotner Blvd, Ste 200
Lincoln, NE 68505
402-476-9665

MECHANICAL/ELECTRICAL ENGINEERS
Olsson Associates
601 P Street, Suite 200
Lincoln, NE 68508
402-474-6311

City of Hastings

Hastings City Auditorium Interior Renovation

SINCLAIR hille architects
700 Q St. Lincoln, NE 68508 T: 402 476 7331 F: 402 476 8341

Millwork & Section Details

SHA PROJECT NO. 15011

A600

© Copyright SINCLAIR HILLE ARCHITECTS

SPRINKLER NOTE:
EXISTING FIRE PROTECTION SPRINKLER SYSTEM SHALL BE MODIFIED AND EXTENDED TO ALL ACCESSORY SPACES CONTIGUOUS TO THE STAGE. SYSTEM IS TO MEET THE REQUIREMENTS OF THE NFPA CODES, THE STATE FIRE MARSHAL'S OFFICE, AND THE OWNER'S APPROVING INSURANCE AGENCY. SPRINKLER CONTRACTOR SHALL COORDINATE THE LOCATIONS OF ALL CEILING MOUNTED SPRINKLER HEADS TO AVOID ANY AND ALL INTERFERENCE WITH ALL OTHER TRADES. IF CONFLICTS DO OCCUR SUCH THAT LIGHTS, DUCTS, DIFFUSERS, GRILLES, OR CEILING SYSTEMS CANNOT BE INSTALLED IN THEIR REQUIRED LOCATIONS DUE TO SPRINKLER PIPING INTERFERENCE, THE PIPING SHALL BE RELOCATED OR REROUTED AT NO ADDITIONAL EXPENSE TO THE PROJECT. SPRINKLER CONTRACTOR SHALL MAINTAIN AN ADEQUATE SUPPLY OF EXTRA PIPING, FITTINGS, AND NECESSARY TOOLS TO MAKE FIELD MODIFICATIONS WITHOUT DELAY. AN APPROVED SPRINKLER SHOP DRAWING DOES NOT PRECLUDE REROUTING IF SO ORDERED BY THE ARCHITECT/ENGINEER.

C1 FIRST FLOOR REFLECTED CEILING PLAN

SCALE: 1/8" = 1'-0"

KEYNOTE LEGEND

062023.A	EXISTING WOOD TRIM; RESTORE DAMAGED OR SOILED AREAS AND TOUCH-UP FINISH AS NEEDED TO ACHIEVE UNIFORM APPEARANCE.
092400.B	NEW EXTERIOR PLASTERWORK ON UNDERSIDE OF PORTICO ROOF.
092900.B	½" GYPSUM CEILING BOARD
095113.A	SUSPENDED ACOUSTICAL PANEL CEILING
099123.B1	FIELD PAINT, PNT1 – SEE SPECIFICATIONS
099123.B4	EXISTING GWB SOFFIT; PAINT FINISH – SEE FINISH SCHEDULE

REVISIONS:

DESIGN ARCHITECT: Michael P Sinclair
PROJECT ARCHITECT: Michael P Sinclair
DRAWN BY: MPS
ISSUED: 11/09/2015

ARCHITECT MICHAEL P. SINCLAIR A-4152 STATE OF NEBRASKA

PROJECT CONSULTANTS

STRUCTURAL ENGINEER
Voss & Associates, Inc
201 North 8th Street, Suite 200
Lincoln, NE 68508
402-476-6645

MECHANICAL/ELECTRICAL ENGINEERS
Olsson Associates
601 P Street, Suite 200
Lincoln, NE 68508
402-474-6311

City of Hastings

Hastings City Auditorium Interior Renovation

SINCLAIR hille architects
700 Q St. Lincoln, NE 68508 T: 402 476 7331 F: 402 476 8341

First Floor Reflected Ceiling Plan

SHA PROJECT NO. 15011

A700

© Copyright SINCLAIR HILLE ARCHITECTS

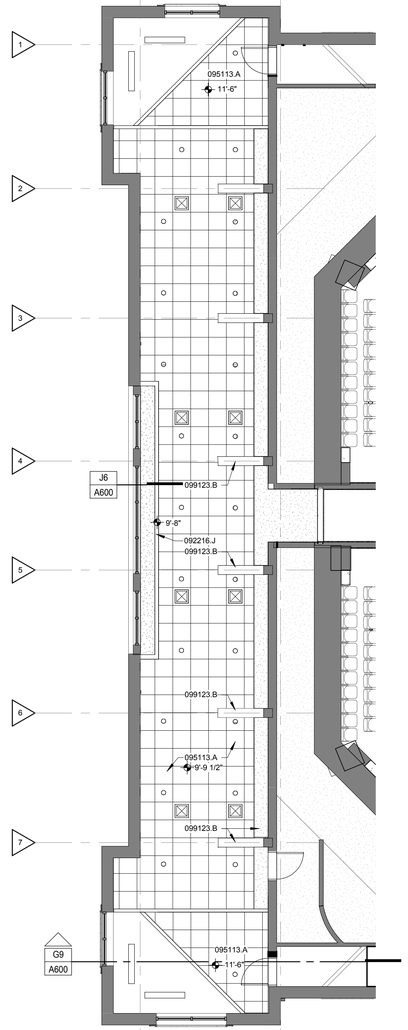

C1 UPPER LOBBY

SCALE: 1/8" = 1'-0"

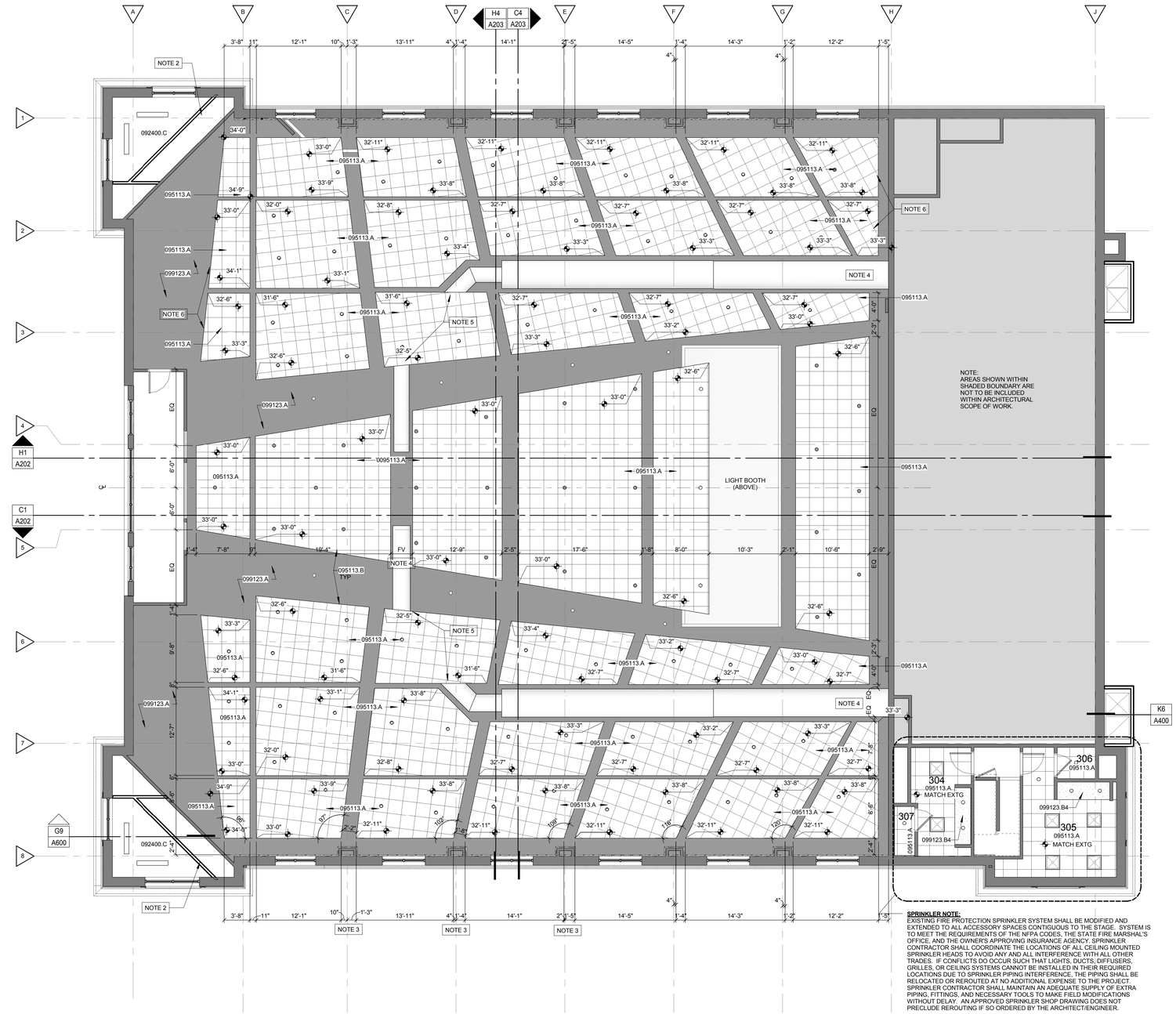

C4 AUDITORIUM REFLECTED CEILING PLAN

SCALE: 1/8" = 1'-0"

SPRINKLER NOTE:
EXISTING FIRE PROTECTION SPRINKLER SYSTEM SHALL BE MODIFIED AND EXTENDED TO ALL ACCESSORY SPACES CONTIGUOUS TO THE STAGE. SYSTEM IS TO MEET THE REQUIREMENTS OF THE NFPA CODES, THE STATE FIRE MARSHAL'S OFFICE, AND THE OWNER'S APPROVING INSURANCE AGENCY. SPRINKLER CONTRACTOR SHALL COORDINATE THE LOCATIONS OF ALL CEILING MOUNTED SPRINKLER HEADS TO AVOID ANY AND ALL INTERFERENCE WITH ALL OTHER TRADES. IF CONFLICTS DO OCCUR SUCH THAT LIGHTS, DUCTS, DIFFUSERS, GRILLES, OR CEILING SYSTEMS CANNOT BE INSTALLED IN THEIR REQUIRED LOCATIONS DUE TO SPRINKLER PIPING INTERFERENCE, THE PIPING SHALL BE RELOCATED OR REROUTED AT NO ADDITIONAL EXPENSE TO THE PROJECT. SPRINKLER CONTRACTOR SHALL MAINTAIN AN ADEQUATE SUPPLY OF EXTRA PIPING, FITTINGS, AND NECESSARY TOOLS TO MAKE FIELD MODIFICATIONS WITHOUT DELAY. AN APPROVED SPRINKLER SHOP DRAWING DOES NOT PRECLUDE REROUTING IF SO ORDERED BY THE ARCHITECT/ENGINEER.

SHEET A701 SHEET SPECIFIC NOTES

NOTE 2	COORDINATE WALL LOCATION WITH CLEARANCE REQUIRED FOR MECHANICAL DUCTWORK
NOTE 3	CENTERLINE OF WALL PILASTERS SERVE AS CONTROL FOR CEILING CLOUD LAYOUT
NOTE 4	COORDINATE CLOUD LAYOUT WITH MECHANICAL DUCTWORK.
NOTE 5	COORDINATE CLOUD LAYOUT WITH MECHANICAL DUCTWORK. INTENT IS THAT DUCTWORK CROSSES ABOVE CLOUD IN THIS LOCATION TO MAXIMIZE HEADROOM AND SIGHTLINES BELOW. CONFIRM FINAL ELEVATIONS WITH ARCHITECT PRIOR TO INSTALLATION.
NOTE 6	SEE SOUTH HALF OF PLAN FOR DIMENSIONING AND POSITIONING OF CEILING CLOUDS

KEYNOTE LEGEND

092216.J	BULKHEAD
092400.C	PATCH EXISTING PLASTER CEILING AS REQUIRED TO PROVIDE SEAMLESS FINISH
095113.A	SUSPENDED ACOUSTICAL PANEL CEILING
095113.B	EXTRUDED ALUMINUM PERIMETER TRIM
099123.A	PAINT EXISTING CEILING TILE – SEE FINISH SCHEDULE
099123.B	PAINT FINISH; SEE FINISH SCHEDULE
099123.B4	EXISTING GWB SOFFIT; PAINT FINISH – SEE FINISH SCHEDULE

REVISIONS:

DESIGN ARCHITECT: Michael P Sinclair

PROJECT ARCHITECT: Michael P Sinclair

DRAWN BY: MPS

ISSUED: 11/09/2015

PROJECT CONSULTANTS

STRUCTURAL ENGINEER
Voss & Associates, Inc
201 North Cotner Boulevard, Suite 200
Lincoln, NE 68505
402-476-9000

MECHANICAL/ELECTRICAL ENGINEERS
Olson Associates
601 Old Cheney Road, Suite 200
Lincoln, NE 68508
402-414-5311

City of Hastings

Hastings City Auditorium Interior Renovation

SINCLAIR hille architects
700 Q St. Lincoln, NE 68508 T: 402 476 7331 F: 402 476 8341

Balcony Level Reflected Ceiling Plan

SHA PROJECT NO. 15011

A701

© Copyright SINCLAIR HILLE ARCHITECTS

MARK	TYPE	SIZE	VERTICAL REINFORCING	BOND COURSE REINFORCING	
A	1	8"	#5 AT 48" O.C.	CMU SIZE	REINF. SIZE
B	-	-	-	4" 6" 8" AND 10" 12" AND 16"	1 - #3 1 - #4 2 - #4 2 - #5
C	-	-	-		

NOTES:
1. PROVIDE HORIZONTAL JOINT REINFORCING AT 1'-4" O.C. TYP. U.N.O. SEE GENERAL STRUCTURAL NOTES FOR DESCRIPTION.
2. SEE GENERAL STRUCTURAL NOTES AND DESIGN DATA FOR GROUT MIX DESIGN AND GROUT LIFT REQUIREMENTS.
3. REFER TO TYPICAL CMU WALL REINFORCING DETAILS.

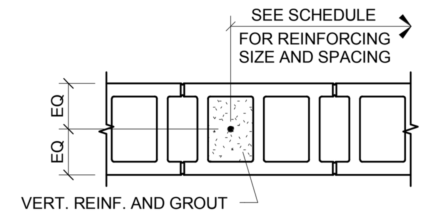

TYPE 1

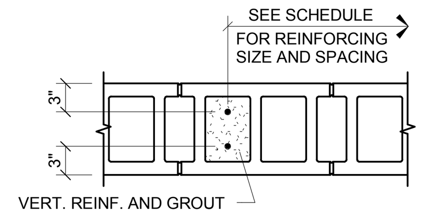

TYPE 2

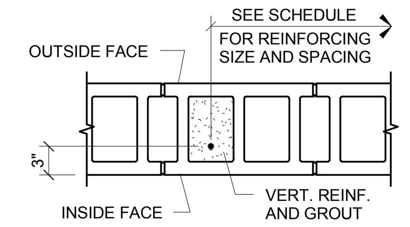

TYPE 3

NOTES:
1. SEE SECTIONS OR CMU REINFORCING SCHEDULE FOR REINFORCING SIZE AND SPACING.
2. PROVIDE REINFORCING FROM FOUNDATION TO TOP OF WALL AT VERTICAL WALL REINFORCING DETAILS.
3. PROVIDE A CONTINUOUS BOND COURSE AT TOP OF OR WITH IN 3 COURSES OF THE TOP OF ALL CMU WALLS AND PARTITIONS.
4. LOCATE CMU CONTROL JOINTS AT 24'-0" O.C. MAX. IN WALLS 16'-0" OR GREATER IN HEIGHT AT 20'-0" O.C. MAX. IN WALLS LESS THAN 16'-0" IN HEIGHT.
5. PROVIDE A CONTINUOUS BOND COURSE AT ALL JOIST BEARING ELEVATIONS.
6. LOCATE CMU CONTROL JOINTS AT BRICK EXPANSION JOINTS EXCEPT WHEN BRICK EXPANSION JOINTS ARE WITHIN 4'-0" OF A CORNER.
7. SEE ARCH. DRAWINGS FOR LOCATION OF BRICK EXPANSION JOINTS.

CMU REINFORCING NOTES

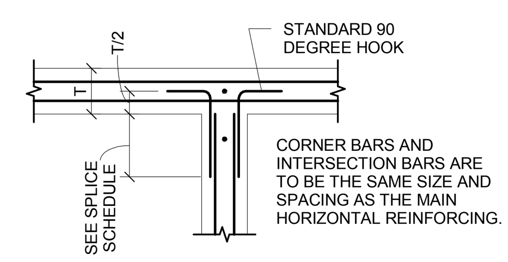

WALL INTERSECTIONS

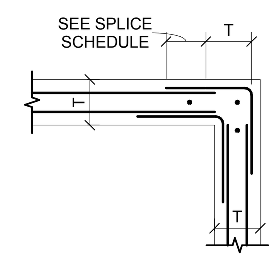

CORNERS

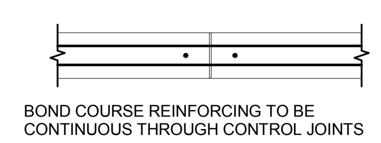

CONTROL JOINTS

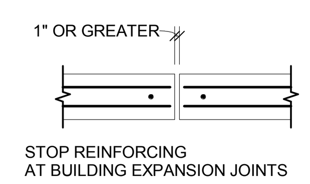

EXPANSION JOINTS

BOND COURSE REINFORCING DETAILS

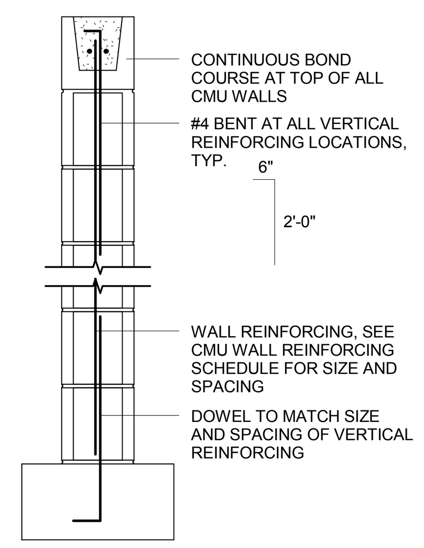

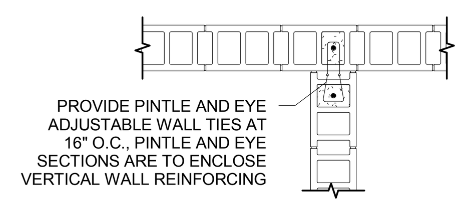

WALL INTERSECTIONS

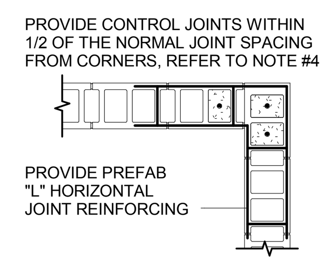

CORNERS

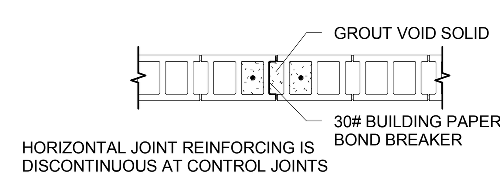

CONTROL JOINTS

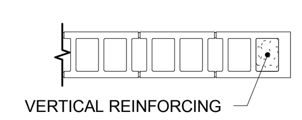

DISCONTINUOUS WALLS

VERTICAL REINFORCING DETAILS

TYPICAL CMU REINFORCING DETAILS

AT GRADE BEAMS. LOCATE THE SLEEVE 6" CLEAR ABOVE THE TOP OF THE BOTTOM STEEL 1'-0" MIN. BELOW THE TOP OF THE GRADE BEAM. MAX. SLEEVE SIZE = 10" DIA.

WHERE REQUIRED, LOWER THE BOTTOM OF THE GRADE BEAM. PROVIDE A LAYER OF REINFORCING ABOVE AND BELOW SLEEVE. SIZE AND QUANTITY TO BE SAME AS THE SCHEDULED REINFORCING

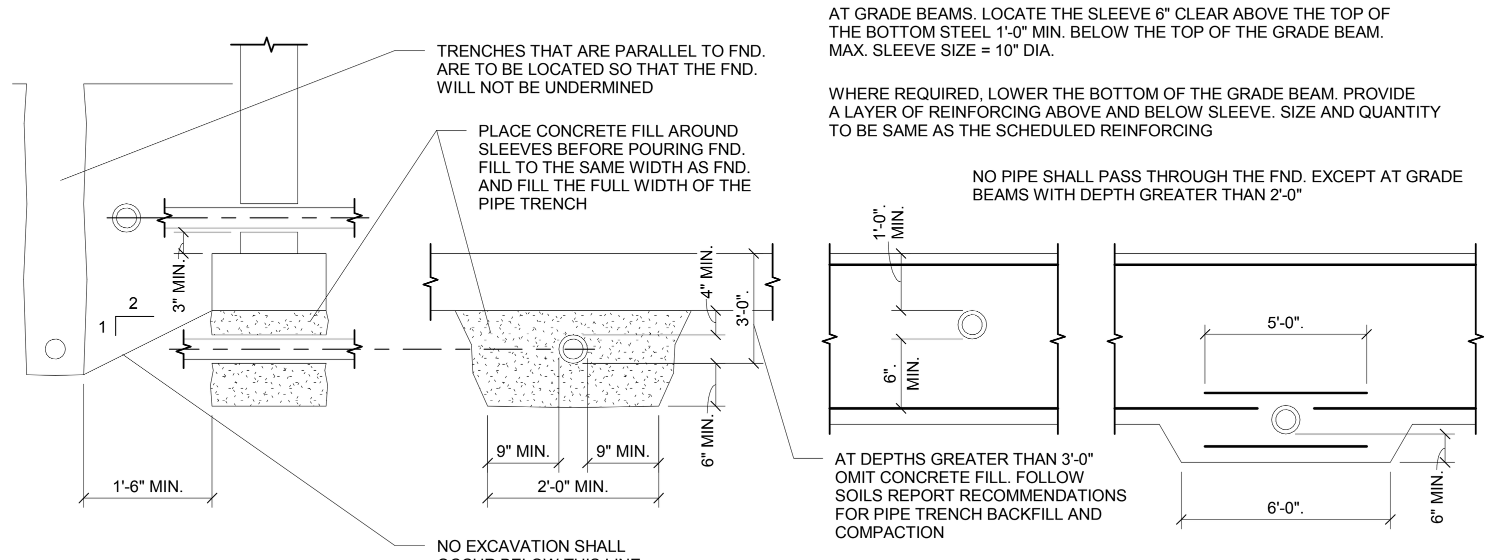

DETAIL FOR PIPES AND TRENCHES LOCATED AT FOOTINGS AND GRADE BEAMS

NOTES:
1. SEE GENERAL STRUCTURAL NOTES FOR SPLICE LENGTHS AND CLEAR COVER REQUIREMENTS.
2. CORNER AND INTERSECTION BARS ARE TO BE THE SAME SIZE AND SPACING AS THE MAIN HORIZONTAL REINFORCING.
3. CORNER AND INTERSECTION BARS TO HAVE STANDARD 90 DEGREE HOOK.

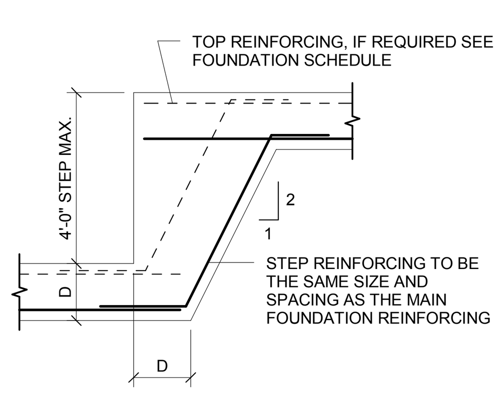

TYPICAL FOUNDATION STEP

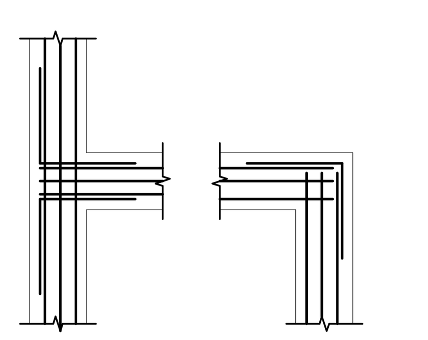
STANDARD FOUNDATION REINFORCING DETAILS

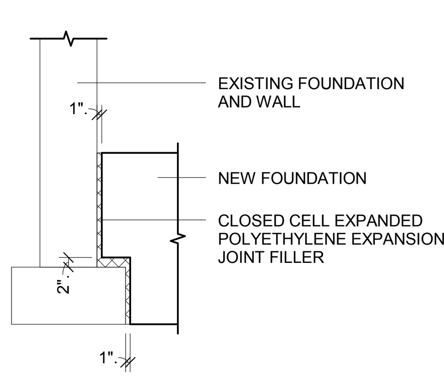

FOUNDATION ADJACENT TO EXISTING STRUCTURES

TYPICAL FOUNDATION DETAILS

GENERAL STRUCTURAL NOTES

1. GENERAL CONTRACTOR'S RESPONSIBILITIES SHALL INCLUDE BUT ARE NOT LIMITED TO:
   a. DETERMINING CONSTRUCTION PROCEDURE AND SEQUENCE.
   b. PROVIDING SHORING, SHEETING, TEMPORARY BRACING, GUYS OR TIEDOWNS WHICH MIGHT BE NECESSARY TO INSURE THE SAFETY OF THE BUILDING AND ITS COMPONENT PARTS DURING CONSTRUCTION.
   c. COORDINATE THE LOCATION OF LOADS, OPENINGS, AND STRUCTURE RELATED TO MECHANICAL EQUIPMENT.

      *MECHANICAL LOADS, OPENINGS AND STRUCTURE RELATED TO MECHANICAL REQUIREMENTS SHOWN ARE FOR BIDDING PURPOSES ONLY.

      *LOADS OR OPENINGS GREATER THAN THOSE SHOWN ON STRUCTURAL OR MECHANICAL DRAWINGS SHALL BE BROUGHT TO THE ATTENTION OF THE ENGINEER OF RECORD BEFORE PROCEEDING WITH WORK.
   d. VERIFYING AND COORDINATING DIMENSIONS AND ELEVATIONS SHOWN ON THE CONTRACT DOCUMENTS. IF DISCREPANCIES OCCUR, THE CONTRACTOR SHALL NOTIFY THE ARCHITECT BEFORE PROCEEDING WITH THE WORK.
   e. TAKE PROPER PRECAUTIONS TO PROTECT SHALLOW FOOTINGS FROM FROST DURING COLD WEATHER CONSTRUCTION. REFER TO GEOTECHNICAL REPORT FOR MINIMUM FOOTING DEPTHS REQUIRED FOR FROST PROTECTION.
2. IF CONFLICTING INFORMATION IS PRESENT IN THE CONSTRUCTION DOCUMENTS, THE STRICTEST PROVISIONS SHALL GOVERN.
3. UNLESS NOTED OTHERWISE, REQUIREMENTS GIVEN FOR ONE OR MORE LOCATIONS SHALL APPLY AT OTHER LOCATIONS AT WHICH CONDITIONS ARE SIMILAR.

REINFORCED CONCRETE

1. REFER TO DESIGN DATA FOR FURTHER INFORMATION.
2. CONFORM TO ACI (AMERICAN CONCRETE INSTITUTE) STANDARDS AND RECOMMENDATIONS AS OUTLINED IN FIELD REFERENCE MANUAL, SP-15 PROVIDE AT LEAST ON COPY OF THE ACI FIELD REFERENCE MANUAL, SP-15, IN THE FIELD OFFICE AT ALL TIMES.
3. PROVIDE CONTROL JOINTS IN SLAB ON GRADE AS FOLLOWS:

   8" THICK SLABS ______ 24'-0" MAX. SPACING ON ANY SIDE
   6" THICK SLABS ______ 18'-0" MAX. SPACING ON ANY SIDE
   5" THICK SLABS ______ 15'-0" MAX. SPACING ON ANY SIDE
   4" THICK SLABS ______ 12'-0" MAX. SPACING ON ANY SIDE

   THE SECTIONS BOUNDED BY CONTROL OR CONSTRUCTION JOINTS SHALL BE APPROXIMATELY SQUARE, WITH THE LENGTH TO WIDTH RATIO LESS THAN 1 1/2 TO 1.
4. PROVIDE DOWELS IN FOOTINGS TO MATCH SIZE AND SPACING OF VERTICAL WALL AND PIER REINFORCING.
5. PROVIDE REINFORCING AT LOCATIONS AS SHOWN IN CIP CONCRETE STANDARD REINFORCING DETAILS.
6. UNLESS NOTED OTHERWISE, ALL REINFORCING BAR SPLICES SHALL BE IN ACCORDANCE WITH THE TABLE SHOWN BELOW:

BAR SIZE	SPLICE LENGTH (IN INCHES) NON TOP BAR	TOP BAR
#3	14	18
#4	19	24
#5	23	30
#6	30	40
#7	41	54
#8	55	71
#9	69	90
#10	88	114
#11	108	140

   TOP BARS ARE HORIZONTAL REINFORCEMENT PLACED SO THAT MORE THAN 12" OF FRESH CONCRETE IS CAST IN THE MEMBER BELOW THE REINFORCEMENT.
7. THE FOLLOWING MINIMUM CONCRETE COVER SHALL BE PROVIDED FOR REINFORCEMENT:

   MIN. COVER IN INCHES

   CONCRETE CAST AGAINST AND PERMANENTLY EXPOSED TO EARTH ______ 3

   CONCRETE EXPOSED TO EARTH OR WEATHER:
   #6 THROUGH #18 BARS ______ 2
   #5 BAR AND SMALLER ______ 1 1/2

   CONCRETE NOT EXPOSED TO WEATHER OR IN CONTACT WITH GROUND:
   SLABS AND JOIST:
   #11 BAR AND SMALLER ______ 3/4

   WALLS ______ 1 1/2

   BEAMS, COLUMN:
   PRIMARY REINFORCEMENT,
   TIES, STIRRUPS AND SPIRALS ______ 1 1/2
8. IF CAST-IN-PLACE WALLS ARE SHOWN ON THE DRAWINGS BUT THE REINFORCING IS NOT INDICATED, PROVIDE THE FOLLOWING STEEL IN CONCRETE WALLS.

THICKNESS	VERTICAL BARS	HORIZONTAL BARS
6"	#4 AT 18" O.C.	#4 AT 16" O.C.
8"	#4 AT 18" O.C.	#4 AT 12" O.C.
10"	#4 AT 16" O.C.	#4 AT 10" O.C.
12"	#4 AT 18" O.C.	#4 AT 16" O.C.

   CENTER REINFORCING IN WALLS 10" AND SMALLER UNLESS NOTED OTHERWISE.
   PROVIDE REINFORCING IN EACH FACE FOR WALLS GREATER THAN 10".
9. PROVIDE 2 - #5 BARS AROUND ALL RECTANGULAR OPENINGS IN CAST-IN-PLACE WALLS. BARS SHALL EXTEND NO LESS THAN 24" BEYOND THE OPENING.

MASONRY

1. REFER TO DESIGN DATA FOR FURTHER INFORMATION.
2. UNLESS NOTED OTHERWISE, ALL REINFORCING BAR SPLICES SHALL BE:

BAR SIZE -	#3	#4	#5	#6	#7
LAP LENGTH -	16"	24"	32"	40"	48"

3. ALL MASONRY WALLS SHALL HAVE HORIZONTAL MASONRY JOINT REINFORCEMENT AT 16" ON CENTER. THE MINIMUM LAP LENGTH SHALL BE 6" UNLESS NOTED OTHERWISE.
4. WHEN A WALL CONSISTS OF A WYTHE OF CONCRETE MASONRY BLOCKS AND A WYTHE OF BRICK VENEER, PROVIDE LADDER TYPE HORIZONTAL JOINT REINFORCING WITH ADJUSTABLE WALL TIE EYE SECTIONS AT 24" ON CENTER. RECTANGULAR ADJUSTABLE WALL TIE PINTLE SECTIONS ARE FITTED INTO THE EYE SECTIONS TO COMPLETE THE ASSEMBLY.
5. COMPLY WITH THE REQUIREMENTS OF ACI 530.1 SECTION 3.2F FOR CLEAN OUTS AND SECTION 3.5 GROUT PLACEMENT.
6. ALL OPENINGS IN CMU WALLS SHALL BE REINFORCED AS SHOWN IN THE STANDARD CMU REINFORCING DETAILS.
7. GROUT CORES SOLID ONE FULL COURSE ABOVE AND BELOW ALL BOLTS AND EXPANSION JOINTS.
8. GROUT ALL CORES SOLID BELOW GRADE AT EXTERIOR WALLS.
9. WHERE HOLLOW MASONRY UNITS ARE USED ABOVE HOLLOW MASONRY UNITS OF A DIFFERENT WIDTH, PROVIDE A CONTINUOUS COURSE OF SOLID GROUTED MASONRY AT LEAST 8" HIGH BELOW THE TRANSITION.
10. ALL OPENINGS IN CMU WALLS SHALL HAVE LINTELS WHETHER SHOWN OR NOT. ADAPT LINTEL DETAILS SHOWN. ALL STEEL EXTERIOR LINTELS SHALL HAVE THE EXPOSED SURFACES AND VENEER BEARING SURFACES GALVANIZED.

STRUCTURAL STEEL

1. REFER TO DESIGN DATA FOR FURTHER INFORMATION.
2. FIELD CUTTING OR OTHER FIELD MODIFICATIONS TO STRUCTURAL STEEL SHALL NOT BE MADE WITHOUT PRIOR APPROVAL FROM THE ENGINEER OF RECORD.
3. SIZES OF FILLET WELDS NOT SHOWN SHALL CONFORM TO MINIMUM SIZES AS SPECIFIED BY AISC "SPECIFICATIONS FOR STRUCTURAL STEEL BUILDINGS".
4. PROVIDE TWO COATS OF ASPHALTIC PAINT ON ALL STRUCTURAL STEEL SHAPES EXPOSED TO THE SOIL OR BELOW TOP OF SLAB ON GRADE.

DESIGN DATA

GOVERNING CODE: ______ 2009 INTERNATIONAL BUILDING CODE

SOILS REPORT:

A SOILS INVESTIGATION WAS PERFORMED BY: OLSSON ASSOCIATES
REPORT # 014-2427
THE CONTRACTOR SHALL COMPLY WITH THE RECOMMENDATIONS OF THE REPORT.

THE CONTRACTOR SHALL NOTIFY THE GEOTECHNICAL ENGINEER AFTER EXCAVATION TO DETERMINE IF THE CONDITIONS COMPLY WITH THE SOILS REPORT.

EXCAVATIONS SHALL BE TESTED BY AN APPROVED TESTING LABORATORY PRIOR TO PLACING CONCRETE.

ALLOWABLE NET SOIL BEARING PRESSURE ______ 2000 PSF

DESIGN LOADS:

BUILDING CATEGORY ______ II

LIVE LOADS
STAIRS AND LANDINGS ______ 100 PSF

WIND LOADS
SPEED ______ 90 M.P.H.
EXPOSURE ______-______ B

SEISMIC LOADS
SITE CLASSIFICATION - D
SEISMIC DESIGN CATEGORY - A
Ss = .092
S1 = .041

MATERIALS:

CONCRETE

28 DAY CONCRETE STRENGTHS (MINIMUM):
FOOTINGS ______ 4000 PSI
SLAB ON GRADE ______ 4000 PSI
TOPPING ______ 4000 PSI
REINFORCING BARS ______ ASTM A615 GRADE 60
WELDED BARS AND ANCHORS ______ ASTM A706 GRADE 60
WELDED WIRE FABRIC (WWF)
SLABS ON GRADE < 6" THICK ______ 6x6-W1.4xW1.4 WWF

MASONRY

CMU ______ GRADE N, NORMAL WEIGHT
fm ______ 1500 PSF
REINFORCING BARS ______ ASTM A615 GRADE 60
HORIZONTAL JOINT REINFORCING ______ 9 GAGE LADDER TYPE
GALVANIZING
INTERIOR WALLS ______ ASTM A641 CLASS 1
EXTERIOR WALLS ______ ASTM A153 CLASS B-2
MASONRY GROUT ______ 6 1/2 SACK, READY MIX SAND-GRAVEL CONCRETE WITH A SLUMP OF 6 TO 10 "
MORTAR
CMU ______ TYPE S
BRICK ______ TYPE N

STRUCTURAL STEEL

W SHAPES ______ ASTM A992
ROLLED SHAPES AND PLATES ______ ASTM A36
TUBES ______ ASTM A500 GRADE B
PIPES ______ ASTM A53 TYPE E OR S
BOLTS (UNLESS NOTED OTHERWISE) ______ ASTM A325
ANCHOR RODS ______ ASTM F1554, GRADE 36
EXPANSION BOLTS ______ HILTI KWIK BOLT 3 OR APPROVED EQUIVALENT
ADHESIVE ANCHORS ______ HILTI HIT HY 150 MAX. OR APPROVED EQUIVALENT
SCREW ANCHORS ______ HILTI HUS-H OR SIMPSON TITEN HD
SLEEVE ANCHORS ______ HILTI HLC OR APPROVED EQUIVALENT
FASTENERS IN CONTACT WITH TREATED WOOD ______ 304 OR 316 STAINLESS STEEL OR HOT DIP GALVANIZED OR APPROVED EQUIVALENT

CONCRETE FLOOR AND FORM DECK ______ 1 1/2", TYPE "VL", 20 GAUGE, GALV.

SPECIAL INSPECTION

SPECIAL INSPECTION SHALL BE PERFORMED AS REQUIRED BY LOCAL BUILDING OFFICIAL, ACCORDING TO CHAPTER 17 OF IBC, AND AS DIRECTED BELOW:

STEEL CONSTRUCTION
TABLE 1704.3
ALL EXCEPTIONS APPLY

CONCRETE CONSTRUCTION
TABLE 1704.4
EXCEPTIONS 1,2,3 AND 5 APPLY

MASONRY CONSTRUCTION
TABLE 1704.5.1

C:\Users\James\Documents\James' Documents\Revit Files\Revit 2015\Hastings Auditorium Renov_Voss_Local_jde.rvt

DESIGN ARCHITECT:
PROJECT ARCHITECT:
DRAWN BY:
ISSUED: 11/09/2015
REVISIONS:

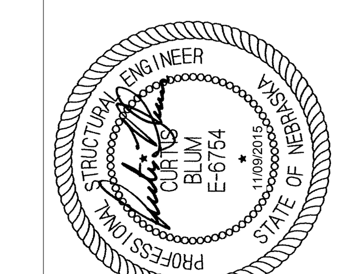

PROJECT CONSULTANTS

STRUCTURAL ENGINEER
Voss & Associates, Inc
201 North 7th Street, Suite 200
Lincoln, NE 68508
402-476-6365

MECHANICAL/ELECTRICAL ENGINEERS
Olsson Associates
601 P Street, Suite 200
Lincoln, NE 68508
402-474-6311

City of Hastings

Hastings City Auditorium Interior Renovation

SINCLAIR hille architects
700 Q St. Lincoln, NE 68508 T: 402 476 7331 F: 402 476 8341

STRUCTURAL SCHEDULES AND STANDARD DETAILS

SHA PROJECT NO. 15011

S100

© Copyright SINCLAIR HILLE ARCHITECTS

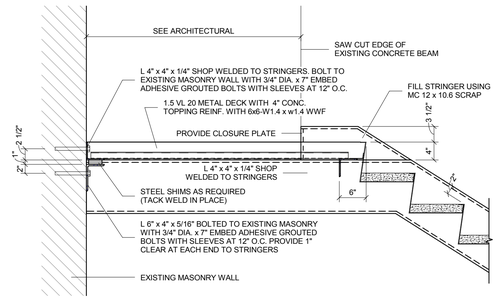

K1 STAIR DETAIL

SCALE: 3/4" = 1'-0"

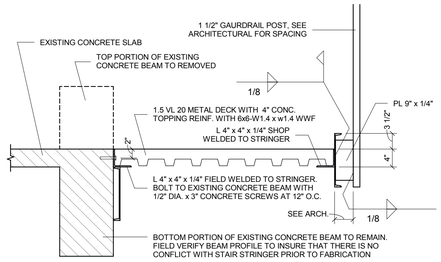

K5 STAIR DETAIL

SCALE: 3/4" = 1'-0"

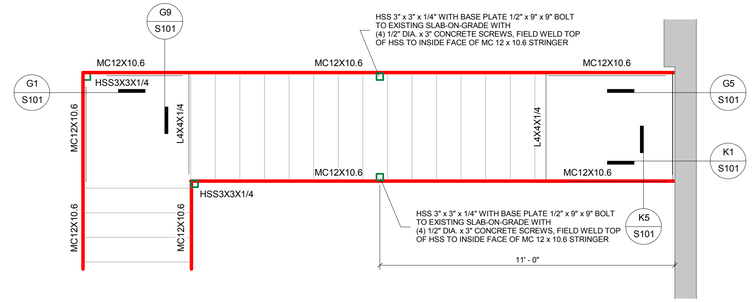

K8 SOUTH AUDITORIUM STAIR FRAMING PLAN

SCALE: 3/8" = 1'-0"

NORTH AUDITORIUM STAIR SIMILAR - OPPOSITE HAND

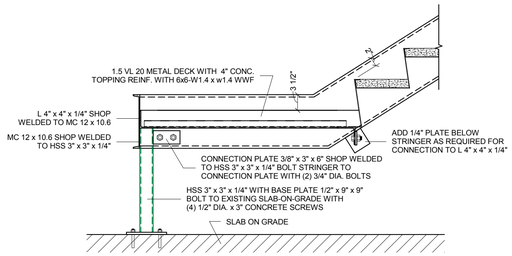

G1 STAIR DETAIL

SCALE: 3/4" = 1'-0"

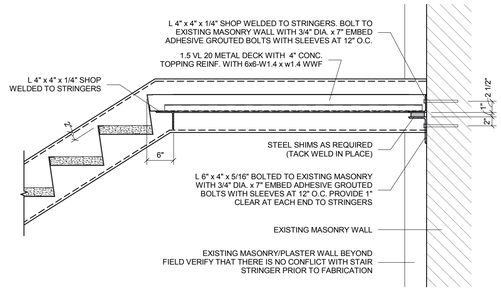

G5 STAIR DETAIL

SCALE: 3/4" = 1'-0"

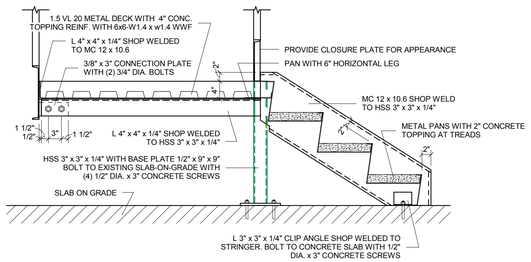

G9 STAIR DETAIL

SCALE: 3/4" = 1'-0"

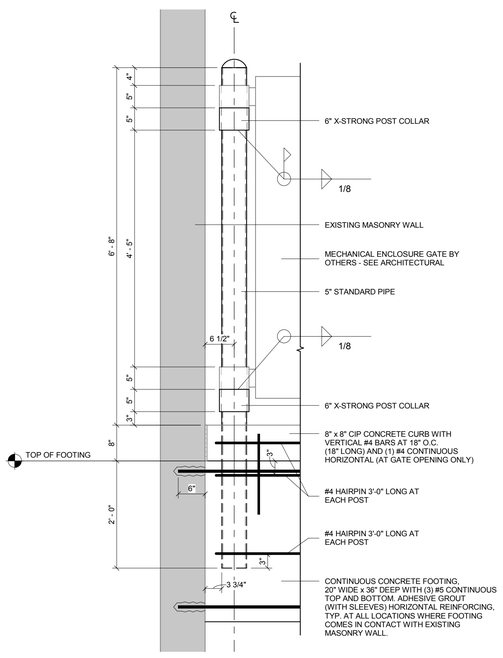

A2 EXTERIOR GATE POST DETAIL

SCALE: 3/4" = 1'-0"

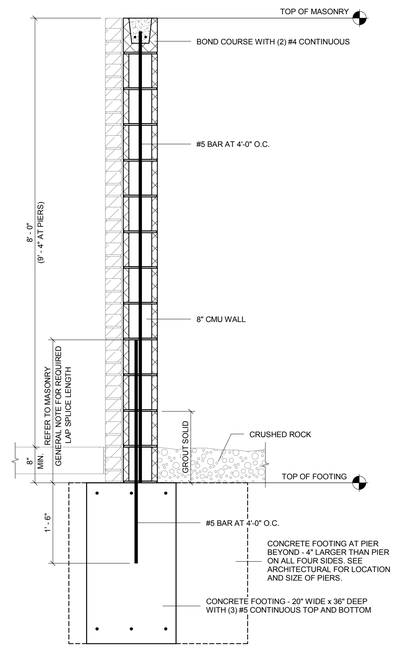

A6 EXTERIOR SCREEN WALL DETAIL

SCALE: 3/4" = 1'-0"

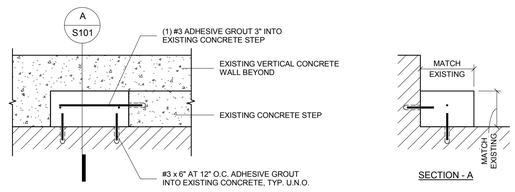

E9 BALCONY STEP DETAIL

SCALE: 3/4" = 1'-0"

TYPICAL EXTENSION OF CONCRETE BALCONY STEPS

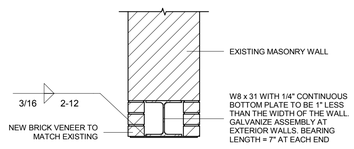

C9 LINTEL DETAIL

SCALE: 3/4" = 1'-0"

TYPICAL AT NEW OPENINGS IN EXISTING MASONRY WALLS

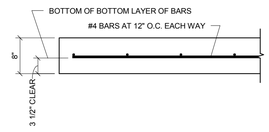

A9 EQUIPMENT PAD DETAIL

SCALE: 3/4" = 1'-0"

TYPICAL AT EXTERIOR MECHANICAL EQUIPMENT

DESIGN ARCHITECT: REVISIONS:

PROJECT ARCHITECT:

DRAWN BY:

ISSUED: 11/09/2015

STRUCTURAL ENGINEER CORTNEY R. BLM E-12754 STATE OF NEBRASKA PROFESSIONAL ENGINEER

PROJECT CONSULTANTS

STRUCTURAL ENGINEER
Voss Associates
201 North 7th Street, Suite 200
Lincoln, NE 68508
402-476-6600

MECHANICAL/ELECTRICAL ENGINEERS
Dixon Associates
601 Sun Valley Blvd, Ste 30
Lincoln, NE 68505
402-474-6111

City of Hastings

Hastings City Auditorium Interior Renovation

SINCLAIR hille architects
700 Q St. Lincoln, NE 68508 T: 402 476 7331 F: 402 476 8341

STRUCTURAL DETAILS

SHA PROJECT NO. 15011

S101

© Copyright SINCLAIR HILLE ARCHITECTS

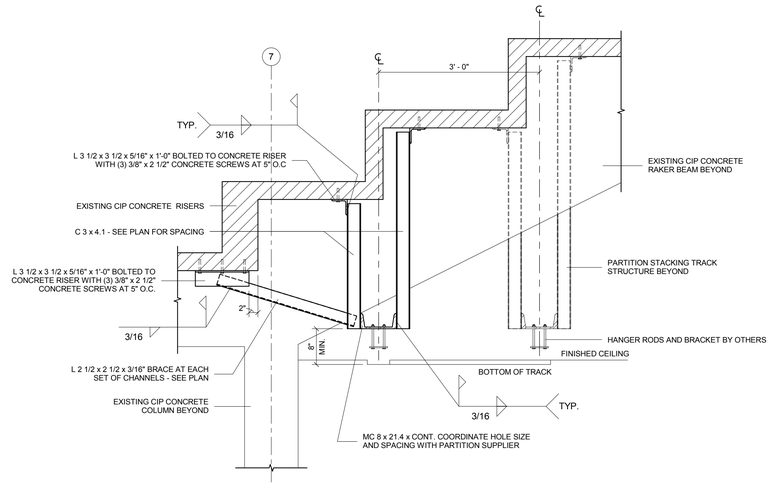

G1 FOLDING PARTITION WALL SUPPORT DETAIL

SCALE: 3/4" = 1'-0"

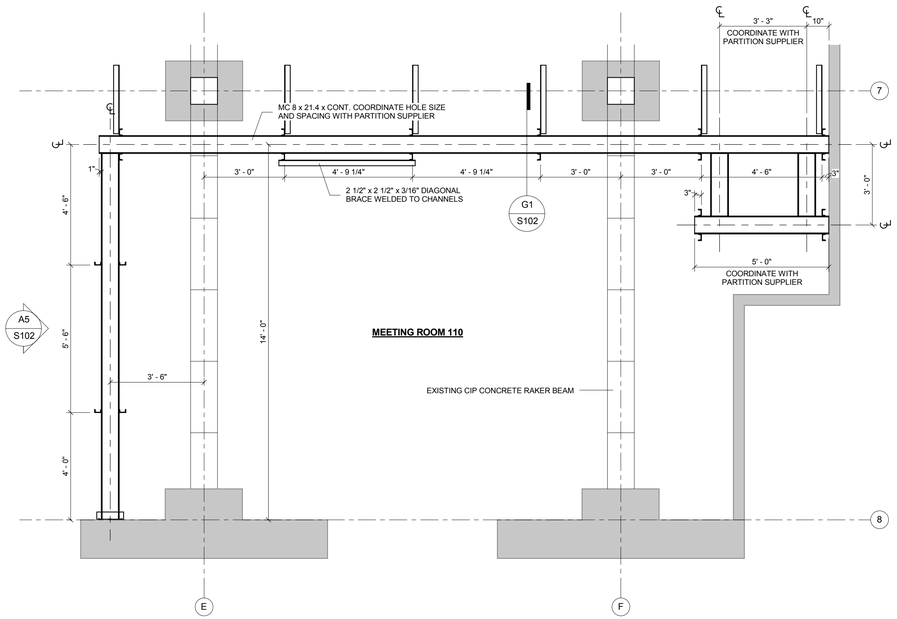

G6 FOLDING PARTITION FRAMING PLAN

SCALE: 3/8" = 1'-0"

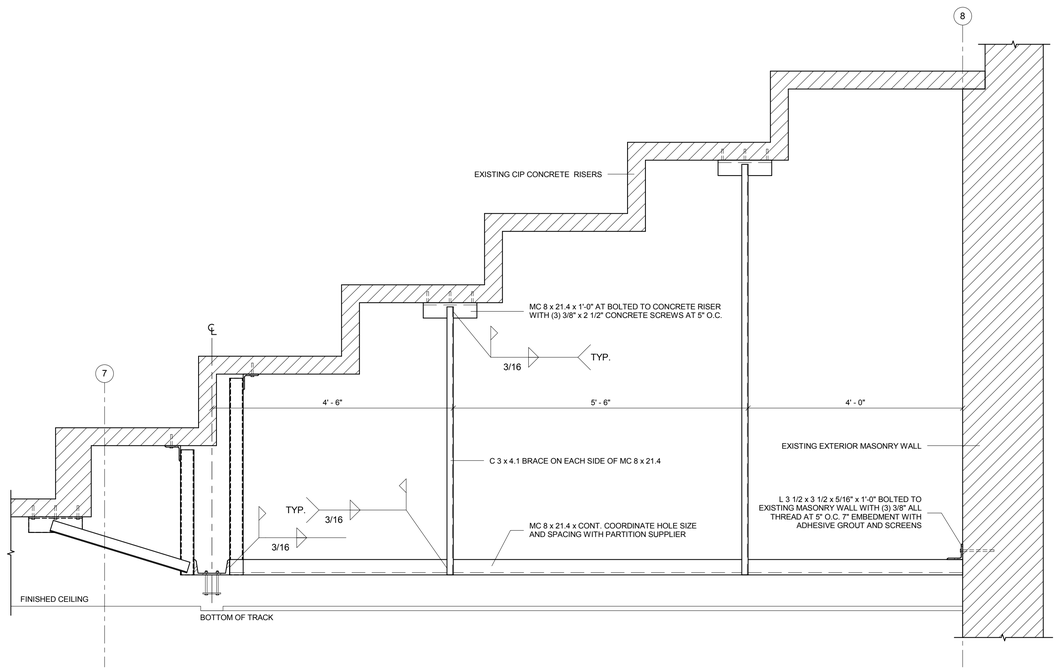

A5 FOLDING PARTITION WALL SUPPORT DETAIL

SCALE: 3/4" = 1'-0"

DESIGN ARCHITECT: REVISIONS:

PROJECT ARCHITECT:

DRAWN BY:

ISSUED: 11/09/2015

PROFESSIONAL STRUCTURAL ENGINEER CURTIS A. BLUM E-12574 STATE OF NEBRASKA

PROJECT CONSULTANTS

STRUCTURAL ENGINEER
Lee Voss & Associates
201 North 7th Street, Suite 200
Lincoln, NE 68508
402-476-6566

MECHANICAL/ELECTRICAL ENGINEERS
Dixon Associates
601 Old Cheney Road, Ste 30
Lincoln, NE 68508
402-474-5111

City of Hastings

Hastings City Auditorium Interior Renovation

SINCLAIR hille architects
700 Q St. Lincoln, NE 68508 T: 402 476 7331 F: 402 476 8341

STRUCTURAL DETAILS

SHA PROJECT NO. 15011

S102

© Copyright SINCLAIR HILLE ARCHITECTS

MECHANICAL LEGEND

STEAM

BBD	BOILER BLOW DOWN
CD	STEAM CONDENSATE DRAIN ABOVE GRADE
CD	STEAM CONDENSATE DRAIN BELOW GRADE
HPC	HIGH PRESSURE CONDENSATE
HPS	HIGH PRESSURE STEAM
LPC	LOW PRESSURE CONDENSATE
LPS	LOW PRESSURE STEAM
MPC	MEDIUM PRESSURE CONDENSATE
MPS	MEDIUM PRESSURE STEAM
	STEAM TRAP

HYDRONIC

CHWR	CHILLED WATER RETURN
CHWS	CHILLED WATER SUPPLY
MU	MAKE-UP WATER
HHWR	HEATING WATER RETURN
HHWS	HEATING WATER SUPPLY
HCWR	HOT/CHILLED WATER RETURN
HCWS	HOT/CHILLED WATER SUPPLY
HPR	HEAT PUMP RETURN
HPS	HEAT PUMP SUPPLY
CTS	COOLING TOWER SUPPLY
CTR	COOLING TOWER RETURN
CR	CONDENSER WATER RETURN
CS	CONDENSER WATER SUPPLY
ERR	ENERGY RECOVERY RETURN
ERS	ENERGY RECOVERY SUPPLY
	AUTOMATIC AIR VENT
	MANUAL AIR VENT

SITE

W	WATER SERVICE
	CURB STOP VALVE
SAN	SANITARY SEWER (SITE)
	POST INDICATOR VALVE
	POST INDICATOR VALVE WITH TAMPER SWITCH
FM	BUILDING SPRINKLER FIRE MAIN
SS	STORM SEWER (SITE)
SD	STORM DRAIN
	THRUST BLOCK
LS	LAWN SPRINKLER
W	WATER MAIN
W	WELL
YHT	YARD HYDRANT
	TREE
X	WIRE FENCE
GAR	GAS RISER
GM	GAS METER
ER	ELECTRICAL RISER
SB	SWITCH BOX
PRP	PROPERTY CORNER
CPT	CONTROL POINT
	BENCHMARK
MLB	MAILBOXES
WDP	WOODEN POST
	TIE DOWN
	CONCRETE
	GRAVEL

GENERAL

	DEMOLITION
	NEW TO EXISTING
#	MECHANICAL KEYNOTE
#	ELECTRICAL KEYNOTE
#	REVISION DELTA
	PIPE OR DUCT UP
	PIPE OR DUCT DOWN
	PIPE OR DUCT CAP
	PIPE ANCHOR
	PIPE GUIDE
	PIPE ROLLER SUPPORT
	FLOW DIRECTION ARROW
	PIPE EXPANSION JOINT
	FLEXIBLE CONNECTOR
	CONCENTRIC REDUCER
	ECCENTRIC REDUCER

VALVES

	T & P RELIEF VALVE
	ISOLATION VALVE
	ISOLATION VALVE IN VERTICAL POSITION
	CHECK VALVE
	BALANCING VALVE
	AUTOMATIC 2-WAY VALVE
	AUTOMATIC 3-WAY VALVE
	PRESSURE REDUCING & REGULATING VALVE
	PRESSURE REGULATING VALVE
	DIAPHRAGM VALVE
	ANGLE VALVE
	STRAINER
	UNION

DOUBLE LINE PIPE LEGEND

	BUTTERFLY VALVE
	GATE VALVE
	TEMPERATURE CONTROL VALVE
	BALL VALVE
	CHECK VALVE
	BASKET STRAINER

NOTE:
DOUBLE LINE PIPE IDENTIFIED BY SYSTEM ABBREVIATION

SANITARY & DOMESTIC

	SANITARY DRAIN BELOW GRADE (PLAN)
	SANITARY DRAIN ABOVE GRADE (PLAN)
	COLD WATER (CW)
	HOT WATER (HW)
	HOT WATER CIRCULATING (HWC)
140 HW	140°F DOMESTIC HOT WATER
T	TEMPERED WATER
TC	TEMPERED WATER CIRCULATING
V	VENT
VBF	VENT BELOW FLOOR
AV	ACID VENT
AW	ACID WASTE
CD	CONDENSATE DRAIN PIPING
RD	ROOF DRAIN (ABOVE GRADE)
RD	ROOF DRAIN (BELOW GRADE)
OD	OVERFLOW DRAIN (ABOVE GRADE)
OD	OVERFLOW DRAIN (BELOW GRADE)
SCW	SOFT COLD WATER
SHW	SOFT HOT WATER
SS	SUB-SOIL DRAIN
FM	FORCE MAIN (PUMP DISCHARGE)

FIRE

F	FIRE PROTECTION PIPING
	FIRE DEPARTMENT CONNECTION
DUCT	DUCT SMOKE DETECTOR AND RELAY
TS	TAMPER SWITCH
FS	FLOW SWITCH
	SPRINKLER HEAD, PENDANT
	SPRINKLER HEAD, SIDE WALL
	ALARM VALVE, WET
	ALARM VALVE, DRY
	FIRE PROTECTION RISER

FIXTURES

WC-1	WATER CLOSET AND TYPE
U-1	URINAL AND TYPE
L-1/S-1	LAVATORY OR SINK AND TYPE
BT-1	BATHTUB AND TYPE
SH-1	SHOWER AND TYPE
SS-1/MS-1	SERVICE SINK OR MOP SINK AND TYPE
EWC-1	ELECTRIC WATER COOLER AND TYPE
VTR	VENT THRU ROOF
RD-1	ROOF DRAIN
OD-1	OVERFLOW DRAIN
GCO	GRADE CLEAN OUT
FCO	FLOOR CLEAN OUT
WCO	WALL CLEAN OUT
CO	HORIZ. CLEAN OUT
FD-1/FS-1	FLOOR DRAIN OR SINK AND TYPE
HB-1	HOSE BIBB
WH-1	WALL HYDRANT
YH-1	YARD HYDRANT
	DOWNSPOUT NOZZLE

HVAC

CD-1 8"ø 200	CEILING DIFFUSER — DESIGNATION, NECK SIZE, CFM
LD-1 4'-0" 300	LINEAR DIFFUSER — DESIGNATION, DIFFUSER LENGTH, CFM
R-1 10x8 250	SUPPLY REGISTER — DESIGNATION, SIZE, CFM
RA-1 12x12 250	RETURN AIR GRILLE — DESIGNATION, SIZE, CFM (OPTIONAL)
G-1 12x8 250	RETURN AIR GRILLE — DESIGNATION, SIZE, CFM (OPTIONAL)
X-1 12x8 300	EXHAUST AIR GRILLE — DESIGNATION, SIZE, CFM
T	THERMOSTAT
H	HUMIDISTAT
CO2	CARBON DIOXIDE SENSOR
12x8	RECTANGULAR DUCT (WxH)
12"ø	ROUND DUCT (DIA.)
12/8	OVAL DUCT (W/H)
	FLEXIBLE DUCT
	SUPPLY AIR/OUTSIDE AIR UP AND DOWN
	RETURN AIR UP AND DOWN
	EXHAUST AIR UP AND DOWN
	MANUAL VOLUME DAMPER
	MOTORIZED DAMPER
	BACKDRAFT DAMPER
	FIRE DAMPER
	SMOKE DAMPER
	COMBINATION FIRE AND SMOKE DAMPER
	TURNING VANES
HCG	HARDWARE CLOTH GRILLE
	VOLUME EXTRACTOR

SPECIALTY SYSTEMS

RO	REVERSE OSMOSIS
OX	OXYGEN PIPING
RD	REFRIGERANT DISCHARGE
FOR	FUEL OIL RETURN
FOS	FUEL OIL SUCTION
FOV	FUEL OIL VENT
G	NATURAL GAS
LPG	LIQUID PETROLEUM GAS
A	COMPRESSED AIR
LR	LIQUID REFRIGERANT
SR	SUCTION REFRIGERANT
RL	PAIR REFRIGERANT LINES (SUCTION, LIQUID)
P	PROPANE
CO2	CARBON DIOXIDE
N	NITROGEN
A	AIR OUTLET
VAC	VACUUM (AIR)
DI	DISTILLED WATER
LV	LABORATORY VACUUM
MV	MEDICAL VACUUM
N2O	NITROUS OXIDE
LOX	LIQUID OXYGEN
LA	LABORATORY COMPRESSED AIR
MA	MEDICAL COMPRESSED AIR
DE	DEIONIZED WATER

Hastings City Auditorium Mechanical Sheet List

Sheet Number	Sheet Title
M001	Mechanical Legend and Sheet List
P101	First Level Plumbing Plan
MD100	Lower Level Mechanical Demo Plan
MD101	First Level Mechanical Demo Plan
M101	First Level Mechanical Plan
M102	Second Level Mechanical Plan
M401	Mechanical Sections
M601	Mechanical Details
M701	Mechanical Schedules
M702	Mechanical Schedules

REVISIONS:

DESIGN ENGINEER: JWH
PROJECT ENGINEER: DAR
DRAWN BY: CFH
ISSUED: 10/05/2015
OA PROJECT #: 015-0534

PROFESSIONAL MECHANICAL ENGINEER DAVID A. ROBERTS E-10518 STATE OF NEBRASKA
11/10/2015 2:42:35 PM

PROJECT CONSULTANTS

STRUCTURAL ENGINEER:
Thorson Baack & Associates
201 North 7th Street, Suite 200
Lincoln, NE 68508
402-476-6365

MECHANICAL/ELECTRICAL ENGINEERS:
Olsson Associates
601 P Street, Suite 200
Lincoln, NE 68508
402-474-6311

City of Hastings

Hastings City Auditorium Interior Renovation

SINCLAIR hille architects
700 Q St. Lincoln, NE 68508 T: 402.476.7331 F: 402.476.8341

Mechanical Legend and Sheet List

SHA PROJECT NO. 15011

M001

© Copyright SINCLAIR HILLE ARCHITECTS

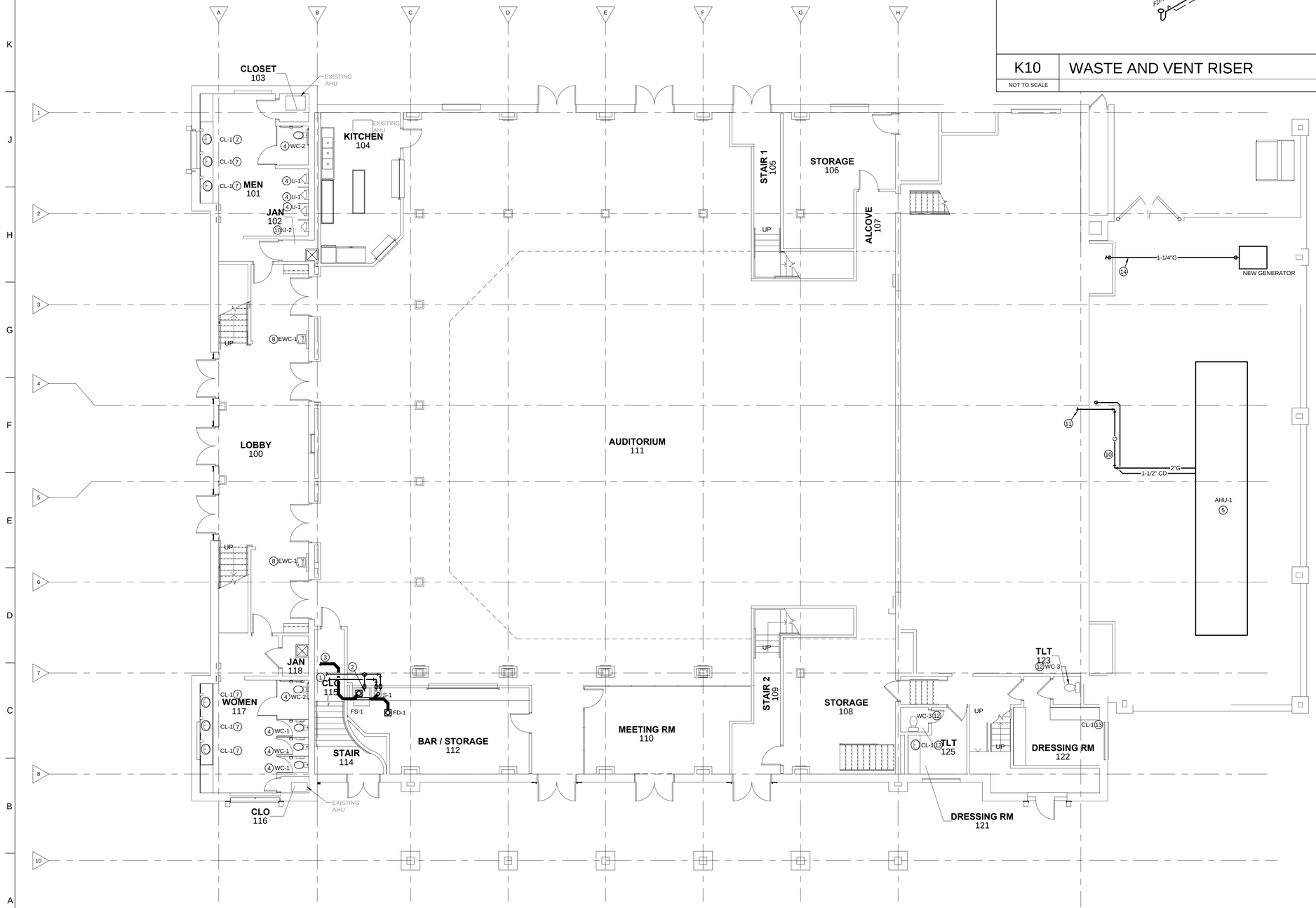

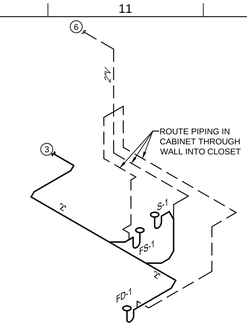

K10 | WASTE AND VENT RISER

NOT TO SCALE

GENERAL NOTES:

A. DO NOT ROUTE ITEMS OVER ELECTRICAL PANELS. PROVIDE 3'-0" CLEARANCE IN FRONT OF ELECTRICAL PANELS AND DEVICES FROM FLOOR TO 6'-6" OR TOP OF PANEL AS PER CODE REQUIREMENTS.

B. COORDINATE UNDERGROUND PIPING WITH STRUCTURAL FOOTINGS, SITE UTILITIES SERVICES AND BUILDING SERVICES. FIELD VERIFY LOCATION OF ALL UTILITIES AND EXACT DIMENSIONS DURING BIDDING PORTION OF PROJECT. NOTIFY ANY DISCREPANCY OR INTERFERENCE TO ENGINEER.

C. UNLESS NOTED/SHOWN OTHERWISE, ALL PIPING SHALL BE RUN AS HIGH AS POSSIBLE, TIGHT TO STRUCTURE WHERE FEASIBLE. RUN PIPES UP IN JOIST SPACE WHERE INDICATED AND AS REQUIRED. COORDINATE WITH ELECTRICAL, AND HVAC CONTRACTORS PRIOR TO INSTALLATION. VALVES AND OTHER MAINTENANCE ITEMS SHALL NOT BE INSTALLED HIGHER THAN 2 FEET ABOVE CEILINGS.

D. LOCATE EQUIPMENT TO ALLOW ACCESS FOR ADJUSTMENT AND SERVICING. REFER TO INSTALLATION MANUALS UNLESS OTHERWISE SPECIFICALLY SHOWN ON THESE DRAWINGS. LOCATE HANGING EQUIPMENT WITHIN THE SPACE SO THAT MAINTENANCE ACCESS IS PROVIDED FROM BELOW AND MAINTENANCE AREA BELOW IS FREE OF OBSTRUCTIONS INCLUDING PIPING, DUCTWORK, CONDUIT OR OTHER BUILDING ELEMENTS.

E. MECHANICAL CONTRACTOR SHALL BE RESPONSIBLE FOR PROPERLY SEALING PENETRATIONS THROUGH FIRE RATED AND/OR SMOKE RATED SEPARATIONS. SEE SPECIFICATIONS FOR FIRE AND SMOKE RATED SEALANTS. COORDINATE WITH ARCHITECTURAL PLANS FOR RATED SEPARATION LOCATIONS.

F. ALL VALVES TO BE INSTALLED IN ACCESSIBLE LOCATIONS.

G. BUILDING 3" OR LARGER SANITARY MAIN AND SEWER PIPING SHALL SLOPE AT A MINIMUM 1/8" PER FOOT SLOPE OR GREATER. 2-1/2" AND SMALLER PIPING SHALL SLOPE AT A MINIMUM OF 1/4" PER FOOT SLOPE OR GREATER.

H. ALL PIPING TO BE INSTALLED CONCEALED FROM VIEW UNLESS NOTED OTHERWISE.

I. REFER TO SANITARY AND VENT RISER DIAGRAMS AND PLUMBING FIXTURE SCHEDULES FOR PIPING AND SIZES NOT SHOWN.

J. REMOVE, PROTECT, AND REINSTALL LAY-IN CEILING TILES AS NEEDED FOR NEW PLUMBING WORK. REPLACE ANY TILES DAMAGED DURING CONSTRUCTION.

SHEET NOTES:

1. ROUTE 1/2" HOT AND COLD WATER CONNECTIONS TO EXISTING PIPING ABOVE THE JANITORS CLOSET.
2. PROVIDE 1/2" BALL VALVE AND CAP FOR FUTURE CONNECTION TO ICE MAKER. ICE MAKER TO BE PROVIDED BY OTHERS.
3. CONNECT NEW SANITARY LINE TO EXISTING SANITARY LINE IN JAN 118.
4. REMOVE EXISTING PLUMBING FIXTURE AND INSTALL NEW FIXTURE IN SAME LOCATION. REUSE EXISTING PIPING AND TRAPS WHERE POSSIBLE. IF NOT, PROVIDE WITH NEW. SEE PLUMBING FIXTURE SCHEDULE ON SHEET M701.
5. PROVIDE P-TRAP ON COOLING COIL CONDENSATE. ROUTE CONDENSATE LINE TO EXISTING STORM DRAIN INLET.
6. CONNECT TO VENT PIPING IN WOMEN'S RESTROOM PLUMBING CHASE.
7. REMOVE EXISTING COUNTERTOP LAVATORY AND INSTALL NEW IN SAME LOCATION. REMOVE PIPING PRIOR TO CABINET DEMOLITION AND REINSTALL UNDER NEW COUNTERTOP. CONTRACTOR MAY REUSE PIPING AT THEIR OWN DISCRETION. PROVIDE NEW P-TRAPS AND STOP VALVES FOR EACH LAVATORY.
8. EXISTING DRINKING FOUNTAIN TO BE REPLACED WITH NEW IN SAME LOCATION. PLUMBING CONNECTION BOX TO BE PROVIDED BY ARCHITECT.
9. NEW URINAL TO BE INSTALLED AT ADA HEIGHT. PROVIDE NEW CARRIER IF EXISTING CARRIER DOES NOT ALLOW FIXTURE TO BE INSTALLED AT HEIGHT ACCORDING TO REGULATIONS.
10. ROUTE NATURAL GAS LINE ON GRADE, UNDERNEATH LOWER SUPPLY AIR DUCT BEFORE PENETRATING EXTERIOR WALL INTO BASEMENT LEVEL. SEE DETAIL F4 ON SHEET M601 FOR MORE INFORMATION.
11. CONNECT NATURAL GAS LINE TO EXISTING GAS SERVICE THROUGH BASEMENT.
12. REMOVE EXISTING PLUMBING FIXTURE IN BOTH 1ST AND SECOND FLOOR DRESSING ROOM. AND INSTALL NEW FIXTURE IN SAME LOCATION. REUSE EXISTING PIPING AND TRAPS WHERE POSSIBLE, IF NOT, PROVIDE WITH NEW. SEE PLUMBING FIXTURE SCHEDULE ON SHEET M701.
13. REMOVE EXISTING COUNTERTOP LAVATORY IN BOTH FIRST AND SECOND FLOOR DRESSING ROOM, AND INSTALL NEW IN SAME LOCATION. REMOVE PIPING PRIOR TO CABINET DEMOLITION AND REINSTALL UNDER NEW COUNTERTOP. CONTRACTOR MAY REUSE PIPING AT THEIR OWN DISCRETION. PROVIDE NEW P-TRAPS AND STOP VALVES FOR EACH LAVATORY.
14. BURY NEW 2" NATURAL GAS LINE TO NEW EMERGENCY GENERATOR. CONNECT LINE TO EXISTING GAS METER. UNDERGROUND GAS PIPING SHALL BE STEEL PIPE WITH WROUGHT-STEEL FITTINGS AND WELDED JOINTS. COAT ALL PIPING AND FITTINGS WITH PROTECTIVE COATINGS.

A1 | FIRST LEVEL PLUMBING PLAN

SCALE: 1/8" = 1'-0"

REVISIONS:

DESIGN ENGINEER: JWH
PROJECT ENGINEER: DAR
DRAWN BY: ZMN
ISSUED: 10/05/2015
OA PROJECT #: 015-0534

MECHANICAL ENGINEER DAVID ROBERTS E-10518 PROFESSIONAL ENGINEER STATE OF NEBRASKA
11/10/2015 2:42:45 PM

PROJECT CONSULTANTS

STRUCTURAL ENGINEER:
Kirkham Michael & Associates
201 North 7th Street, Suite 200
Lincoln, NE 68508
402-476-6365

MECHANICAL/ELECTRICAL ENGINEERS:
Olsson Associates
601 P Street, Suite 200
Lincoln, NE 68508
402-474-6311

City of Hastings

Hastings City Auditorium Interior Renovation

SINCLAIR hille architects
700 Q St. Lincoln, NE 68508 T: 402 476 7331 F: 402 476 8341

First Level Plumbing Plan

SHA PROJECT NO. 15011

P101

© Copyright SINCLAIR HILLE ARCHITECTS

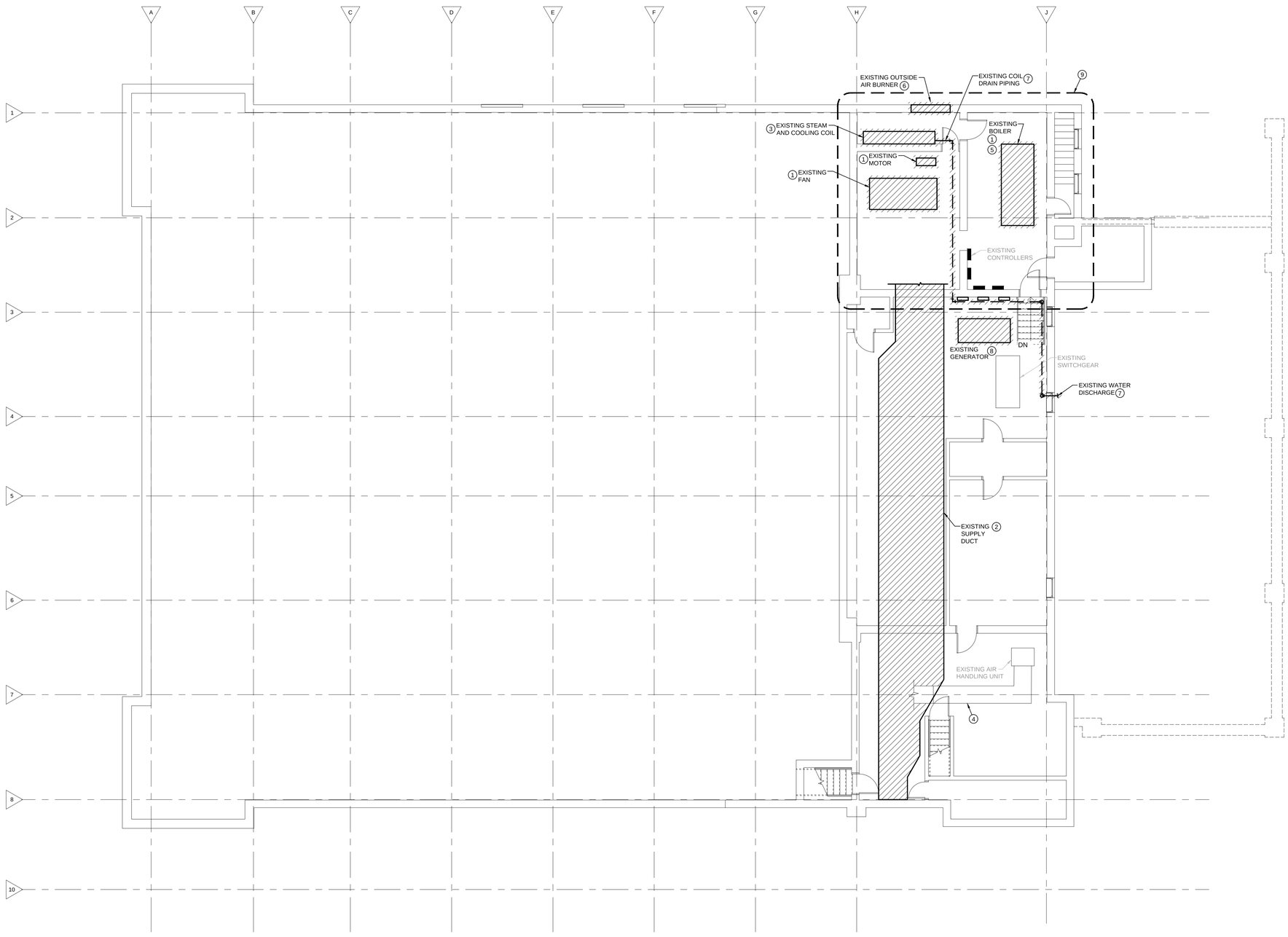

A1 LOWER LEVEL MECHANICAL DEMO PLAN

SCALE: 1/8" = 1'-0"

GENERAL NOTES:

A. EXISTING FLOOR, CABINETRY, EQUIPMENT AND FURNITURE MAY REMAIN. CONTRACTOR TO PROTECT ITEMS FROM ANY DUST ACCUMULATION AND/OR CONSTRUCTION DAMAGE. COORDINATE ITEMS REMAINING WITH ARCHITECTURAL SHEETS.

B. CONTRACTOR TO PROTECT FLOORING THROUGHOUT WORK AREA. ANY DAMAGE TO BE REPAIRED BY CONTRACTOR.

C. SUPPORT EXISTING ELECTRICAL, DATA, PHONE, AND TV WIRING WHERE REQUIRED WHEN PIPING, DUCTWORK, CEILING, ETC. ARE REMOVED. PROTECT WIRING FROM BEING DAMAGED DURING DEMO AND CONSTRUCTION. ANY DAMAGED CABLING, WIRING, OR RACEWAY SHALL BE REPLACED IN ITS ENTIRETY.

D. COORDINATE ITEMS TO BE SALVAGED WITH OWNER.

E. PATCH ALL HOLES LEFT FROM REMOVING PIPES, DUCT, EQUIPMENT, AND CONTROLS.

SHEET NOTES:

1. EXISTING EQUIPMENT AND ALL ASSOCIATED ACCESSORIES TO BE REMOVED COMPLETELY.
2. EXISTING SUPPLY DUCT TO BE REMOVED COMPLETELY. WALLS AND CEILING TO BE PATCHED AS NEEDED. ANY WALL PENETRATIONS TO BE PATCHED AND SEALED TO MATCH ADJACENT FINISH.
3. EXISTING COILS AND FILTER SECTION TO BE REMOVED COMPLETELY. DOMESTIC WATER SUPPLY TO BE REMOVED BACK TO BEFORE METER AND CAPPED AT VALVE.
4. EXISTING CHANGING ROOM SUPPLY DUCT TO REMAIN. REMOVE AUDITORIUM SUPPLY AS TO NOT DAMAGE SMALLER CHANGING ROOM SUPPLY DUCT.
5. BASE OF BOILER CONTAINS ASBESTOS IN INSULATION BETWEEN BRICK AND STEEL. BOILER REMOVAL IS NEEDED TO GAIN ACCESS TO THIS MATERIAL. ABATEMENT TO BE COMPLETED BY OTHERS, COORDINATE WITH OWNER.
6. REMOVE INTAKE LOUVER COMPLETELY, INCLUDING AUTOMATIC DAMPER AND WIRING. PATCH AND SEAL EXTERIOR WALL OPENING. COORDINATE WITH ARCHITECT TO MATCH EXISTING EXTERIOR.
7. REMOVE COIL DRAIN PIPING ENTIRELY TO EXTERIOR DISCHARGE. PATCH AND SEAL WALL PENETRATIONS TO MATCH EXISTING FINISH. AREA DRAIN TO BE REUSED FOR AHU-1 CONDENSATE CONNECTION.
8. EXISTING GENERATOR AND ALL ACCESSORIES TO BE REMOVED COMPLETELY BY ELECTRICAL CONTRACTOR. MECHANICAL CONTRACTOR TO REMOVE VENT AND FLUE PIPING COMPLETELY. SEALING ANY WALL PENETRATIONS. GAS PIPING TO BE REMOVED BACK TO WALL PENETRATION, TO BE USED FOR FUTURE AHU-1 CONNECTION. SEE M101 FOR FURTHER DETAILS.
9. REMOVE ALL STEAM AND CONDENSATE PIPING IN THIS AREA. CAP AND SEAL ANY WALL PENETRATIONS.

REVISIONS:

DESIGN ENGINEER: JWH
PROJECT ENGINEER DAR
DRAWN BY: RJF
ISSUED: 10/05/2015
OA PROJECT #: 015-0534

PROFESSIONAL ENGINEER DAVID A. ROBERTS E-15518 STATE OF NEBRASKA
11/10/2015 2:42:53 PM

PROJECT CONSULTANTS

STRUCTURAL ENGINEER
Voss & Associates, Inc.
201 North 7th Street, Suite 300
Lincoln, NE 68508
402-476-5055

MECHANICAL/ELECTRICAL ENGINEERS
Olsson Associates
601 P Street, Suite 200
Lincoln, NE 68508
402-474-6311

City of Hastings

Hastings City Auditorium Interior Renovation

SINCLAIR hille architects
700 Q St. Lincoln, NE 68508 T: 402 476 7331 F: 402 476 8341

Lower Level Mechanical Demo Plan

SHA PROJECT NO. 15011

MD100

© Copyright SINCLAIR HILLE ARCHITECTS

F:\Projects\015-0534\40-Design\AutoCAD\100 Hastings Auditorium\Sheets\MECH\Mechanical\M_DHVC1A_50534.dwg Zach Nutsch

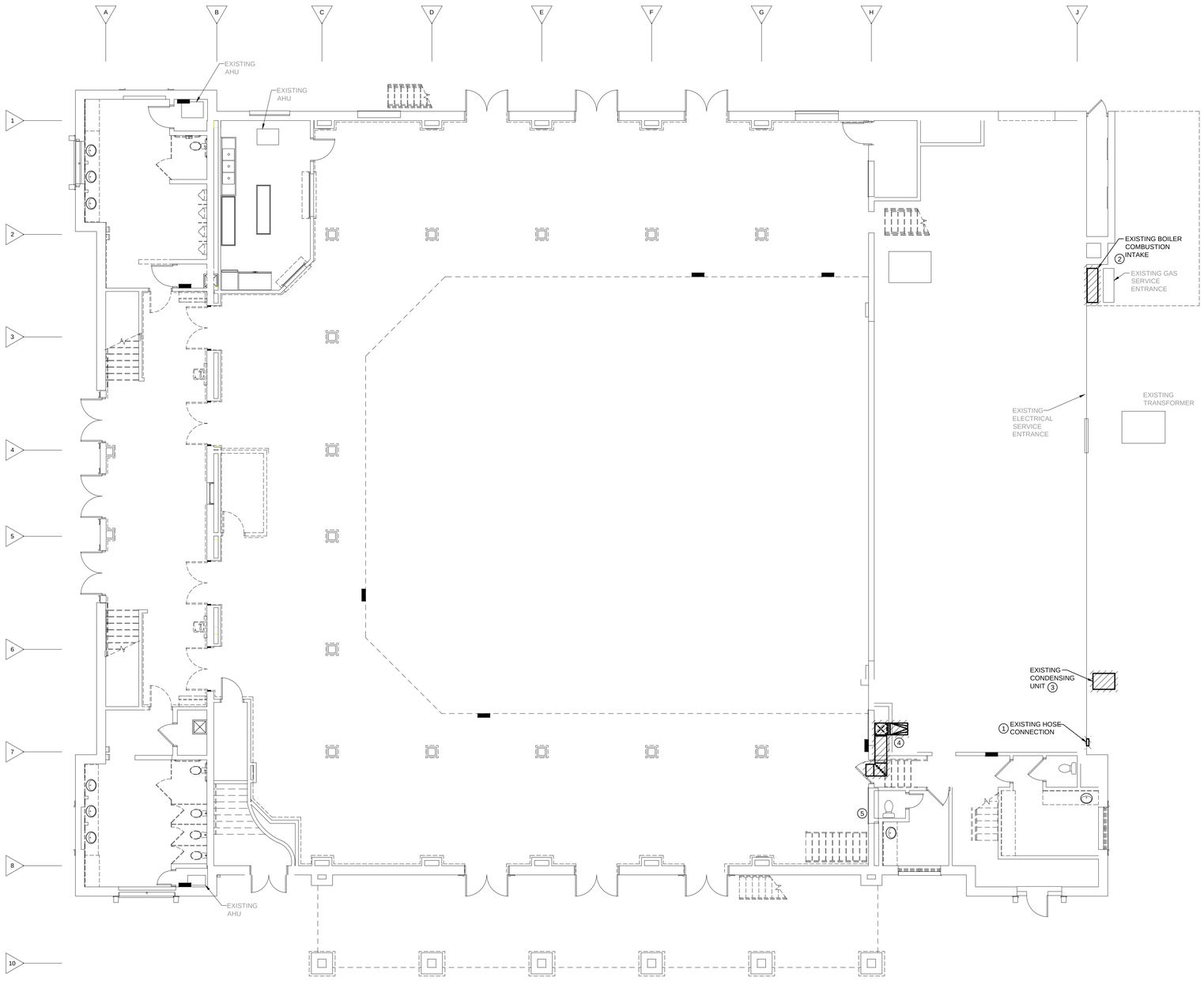

GENERAL NOTES:

A. EXISTING FLOOR, CABINETRY, EQUIPMENT AND FURNITURE MAY REMAIN. CONTRACTOR TO PROTECT ITEMS FROM ANY DUST ACCUMULATION AND/OR CONSTRUCTION DAMAGE. COORDINATE ITEMS REMAINING WITH ARCHITECTURAL SHEETS.

B. CONTRACTOR TO PROTECT FLOORING THROUGHOUT WORK AREA. ANY DAMAGE TO BE REPAIRED BY CONTRACTOR.

C. SUPPORT EXISTING ELECTRICAL, DATA, PHONE, AND TV WIRING WHERE REQUIRED WHEN PIPING, DUCTWORK, CEILING, ETC. ARE REMOVED. PROTECT WIRING FROM BEING DAMAGED DURING DEMO AND CONSTRUCTION. ANY DAMAGED CABLING, WIRING, OR RACEWAY SHALL BE REPLACED IN ITS ENTIRETY.

D. COORDINATE ITEMS TO BE SALVAGED WITH OWNER.

E. PATCH ALL HOLES LEFT FROM REMOVING PIPES, DUCT, EQUIPMENT, AND CONTROLS.

SHEET NOTES:

1. EXISTING HOSE CONNECTION TO BE CAPPED IN WALL AND ABANDONED.
2. PATCH AND SEAL WALL OPENING AFTER DUCT REMOVAL. COORDINATE NEW EXTERIOR FINISH WITH ARCHITECT TO MATCH EXISTING.
3. EXISTING CONDENSING UNIT TO BE RELOCATED. EXISTING PLASTIC BASE TO BE RELOCATED TO NEW LOCATION AND REUSED. EXISTING REFRIGERANT PIPING TO BE REUSED AND EXTENDED TO NEW LOCATION. FOR NEW LOCATION, SEE M101.
4. EXISTING RETURN AND SUPPLY DUCT TO BE REMOVED COMPLETELY.
5. EXISTING DUCTWORK TO BE REMOVED. EXISTING LOUVER TO REMAIN IN PLACE. DUCT SIDE OF LOUVER TO BE SEALED IN PLACE.

A1 FIRST LEVEL MECHANICAL DEMO PLAN

SCALE: 1/8" = 1'-0"

REVISIONS:

DESIGN ENGINEER: JWH
PROJECT ENGINEER: DAR
DRAWN BY: ZMN
ISSUED: 10/05/2015
OA PROJECT #: 015-0534

PROFESSIONAL MECHANICAL ENGINEER DAVID ROBERTS E-10518 STATE OF NEBRASKA
11/10/2015 2:43:01 PM

PROJECT CONSULTANTS

STRUCTURAL ENGINEER:
Vetter Associates, P.C.
201 North 7th Street, Suite 200
Lincoln, NE 68508
402-476-5365

MECHANICAL/ELECTRICAL ENGINEERS:
Olsen Associates
601 P Street, Suite 200
Lincoln, NE 68508
402-474-6311

City of Hastings

Hastings City Auditorium Interior Renovation

SINCLAIR hille architects
700 Q St. Lincoln, NE 68508 T: 402.476.7331 F: 402.476.8341

First Level Mechanical Demo Plan

SHA PROJECT NO. 15011

MD101

© Copyright SINCLAIR HILLE ARCHITECTS

F:\Projects\015-0534\40-Design\AutoCAD\100 Hastings Auditorium\Sheets\MECH\Mechanical\M_NHVC1A_50534.dwg Zach Nutsch

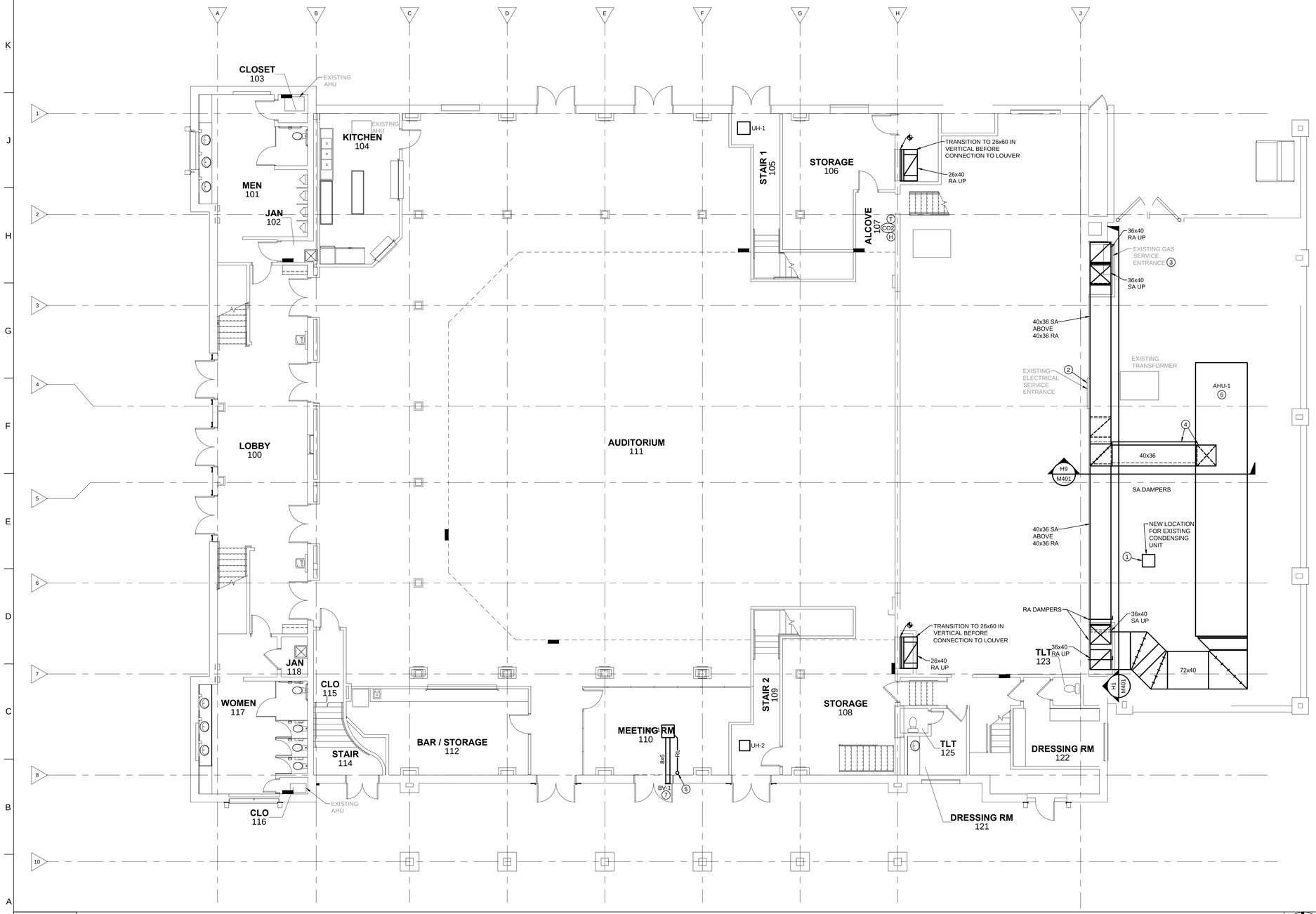

A1 FIRST LEVEL MECHANICAL PLAN

SCALE: 1/8" = 1'-0"

GENERAL NOTES:

A. DO NOT ROUTE ITEMS OVER ELECTRICAL PANELS. PROVIDE 3'-6" CLEARANCE IN FRONT OF ELECTRICAL PANELS AND DEVICES FROM FLOOR TO 6'-6" OR TOP OF PANEL AS PER CODE REQUIREMENTS.

B. COORDINATE EXACT FIRE AND/OR SMOKE RATING WITH ARCHITECTURAL DRAWINGS.

C. UNLESS NOTED/SHOWN OTHERWISE, ALL PIPING SHALL BE RUN AS HIGH AS POSSIBLE, TIGHT TO STRUCTURE WHERE FEASIBLE. RUN PIPES UP IN JOIST SPACE WHERE INDICATED AND AS REQUIRED. COORDINATE WITH ELECTRICAL AND HVAC CONTRACTORS PRIOR TO INSTALLATION. VALVES AND OTHER MAINTENANCE ITEMS SHALL NOT BE INSTALLED HIGHER THAN 2 FEET ABOVE CEILINGS.

D. LOCATE EQUIPMENT TO ALLOW ACCESS FOR ADJUSTMENT AND SERVICING. REFER TO INSTALLATION MANUALS UNLESS OTHERWISE SPECIFICALLY SHOWN ON THESE DRAWINGS. LOCATE HANGING EQUIPMENT WITHIN THE SPACE SO THAT MAINTENANCE ACCESS IS PROVIDED FROM BELOW AND MAINTENANCE AREA AROUND AND ACCESS AREA BELOW IS FREE OF OBSTRUCTIONS INCLUDING PIPING, DUCTWORK, CONDUIT OR OTHER BUILDING ELEMENTS.

E. ROUTE ALL PIPING IN MECHANICAL ROOMS TO PROVIDE A MINIMUM OF 8'-0" CLEARANCE FROM BOTTOM OF PIPE, INSULATION, OR HANGERS TO FINISHED FLOOR.

F. MECHANICAL CONTRACTOR SHALL BE RESPONSIBLE FOR PROPERLY SEALING PENETRATIONS THROUGH FIRE RATED AND/OR SMOKE RATED SEPARATIONS. SEE SPECIFICATIONS FOR FIRE AND SMOKE RATED SEALANTS. COORDINATE WITH ARCHITECTURAL PLANS FOR RATED SEPARATION LOCATIONS.

G. ALL PIPING TO BE INSTALLED CONCEALED FROM VIEW UNLESS NOTED OTHERWISE.

H. REFER TO SANITARY AND VENT RISER DIAGRAMS AND PLUMBING FIXTURE SCHEDULES FOR PIPING AND SIZES NOT SHOWN.

SHEET NOTES:

1. EXTEND REFRIGERANT PIPING TO NEW CONDENSING UNIT LOCATION. NEW PIPING SHALL BE COPPER WITH 1" CLOSED CELL INSULATION.
2. ROUTE DUCTWORK JUST ABOVE THE EXISTING ELECTRICAL SERVICE ENTRANCE TO ENSURE ACCESS TO SERVICE.
3. ROUTE DUCTWORK ABOVE EXISTING GAS SERVICE ENTRANCE.
4. 40x36 SUPPLY DUCT CONNECTIONS ON BOTH TOP AND SIDE OF UNIT.
5. ROUTE AC-1 REFRIGERANT LINE UP TO 2ND LEVEL. SEE M102 FOR CONTINUATION AND CONNECTION NO HP-3.
6. AHU CURB BY OTHERS.
7. OUTSIDE AIR INTAKE (BV-1) TO BE POSITIONED AS HIGH AS POSSIBLE UNDERNEATH EXTERIOR PORTICO.

REVISIONS:

DESIGN ENGINEER: JWH
PROJECT ENGINEER: DAR
DRAWN BY: ZMN
ISSUED: 10/05/2015
OA PROJECT #: 015-0534

PROFESSIONAL MECHANICAL ENGINEER DAVID ROBERTS E-10518 STATE OF NEBRASKA
11/10/2015 2:43:13 PM

PROJECT CONSULTANTS

STRUCTURAL ENGINEER
Lund Pommer Architects
201 North 7th Street, Suite 200
Lincoln, NE 68508
402-476-6365

MECHANICAL/ELECTRICAL ENGINEERS
Olsson Associates
601 P Street, Suite 200
Lincoln, NE 68508
402-474-6311

City of Hastings

Hastings City Auditorium Interior Renovation

SINCLAIR hille architects
700 Q St. Lincoln, NE 68508 T: 402.476.7331 F: 402.476.8341

First Level Mechanical Plan

SHA PROJECT NO. 15011

M101

© Copyright SINCLAIR HILLE ARCHITECTS

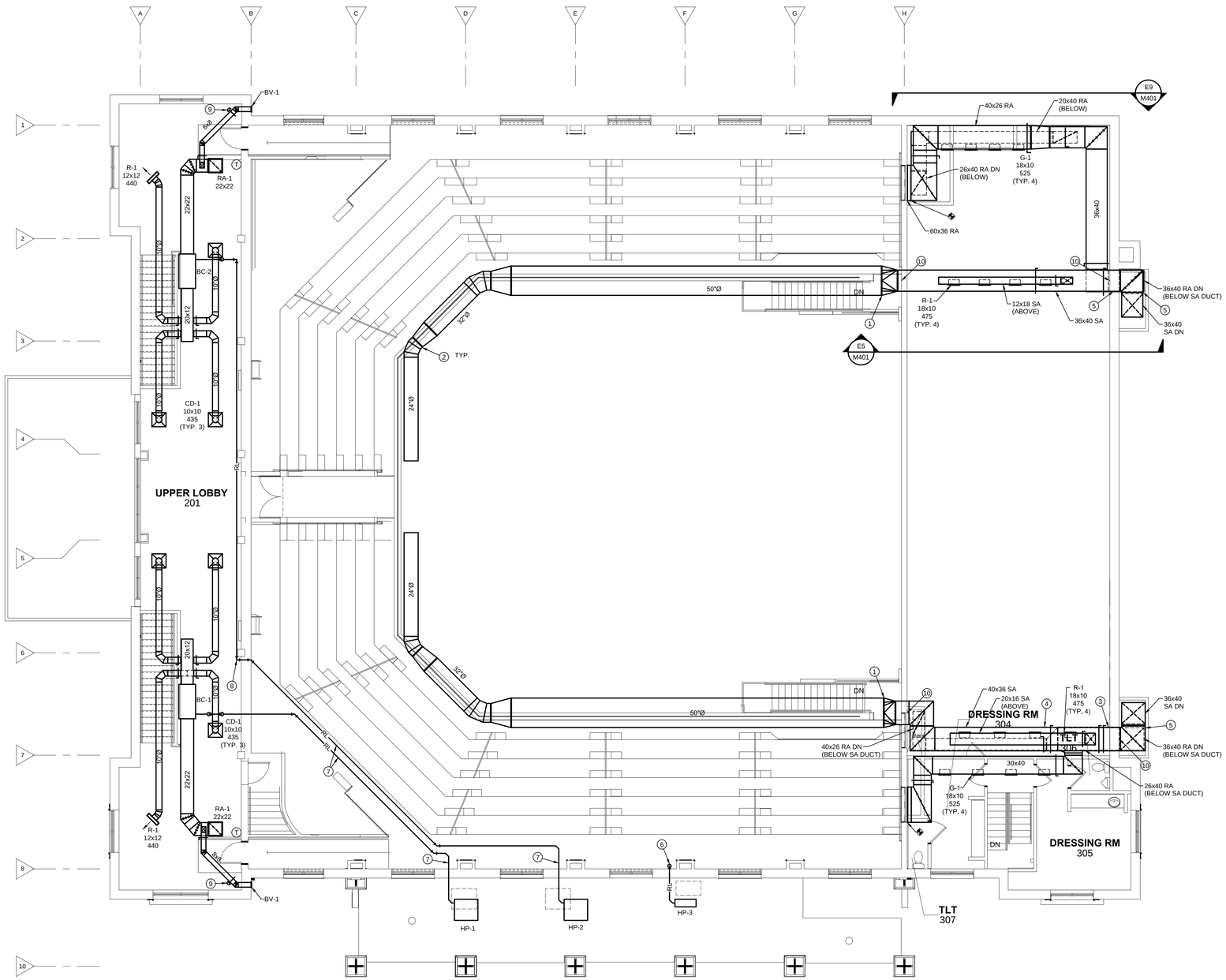

A1 SECOND LEVEL MECHANICAL PLAN

SCALE: 1/8" = 1'-0"

GENERAL NOTES:

A. DO NOT ROUTE ITEMS OVER ELECTRICAL PANELS. PROVIDE 3'-6" CLEARANCE IN FRONT OF ELECTRICAL PANELS AND DEVICES FROM FLOOR TO 6'-6" OR TOP OF PANEL AS PER CODE REQUIREMENTS.

B. COORDINATE EXACT FIRE AND/OR SMOKE RATING WITH ARCHITECTURAL DRAWINGS.

C. UNLESS NOTED/SHOWN OTHERWISE, ALL PIPING SHALL BE RUN AS HIGH AS POSSIBLE, TIGHT TO STRUCTURE WHERE FEASIBLE. RUN PIPES UP IN JOIST SPACE WHERE INDICATED AND AS REQUIRED. COORDINATE WITH ELECTRICAL AND HVAC CONTRACTORS PRIOR TO INSTALLATION. VALVES AND OTHER MAINTENANCE ITEMS SHALL NOT BE INSTALLED HIGHER THAN 2 FEET ABOVE CEILINGS.

D. LOCATE EQUIPMENT TO ALLOW ACCESS FOR ADJUSTMENT AND SERVICING. REFER TO INSTALLATION MANUALS UNLESS OTHERWISE SPECIFICALLY SHOWN ON THESE DRAWINGS. LOCATE HANGING EQUIPMENT WITHIN THE SPACE SO THAT MAINTENANCE ACCESS IS PROVIDED FROM BELOW AND MAINTENANCE AREA AROUND AND ACCESS AREA BELOW IS FREE OF OBSTRUCTIONS INCLUDING PIPING, DUCTWORK, CONDUIT OR OTHER BUILDING ELEMENTS.

E. ROUTE ALL PIPING IN MECHANICAL ROOMS TO PROVIDE A MINIMUM OF 8'-0" CLEARANCE FROM BOTTOM OF PIPE, INSULATION, OR HANGERS TO FINISHED FLOOR.

F. MECHANICAL CONTRACTOR SHALL BE RESPONSIBLE FOR PROPERLY SEALING PENETRATIONS THROUGH FIRE RATED AND/OR SMOKE RATED SEPARATIONS. SEE SPECIFICATIONS FOR FIRE AND SMOKE RATED SEALANTS. COORDINATE WITH ARCHITECTURAL PLANS FOR RATED SEPARATION LOCATIONS.

G. ALL PIPING TO BE INSTALLED CONCEALED FROM VIEW UNLESS NOTED OTHERWISE.

H. REFER TO SANITARY AND VENT RISER DIAGRAMS AND PLUMBING FIXTURE SCHEDULES FOR PIPING AND SIZES NOT SHOWN.

SHEET NOTES:

1. TRANSITION FROM RECTANGULAR, GALVANIZED DUCT TO FABRIC DUCT. SEE ARCHITECTURAL SECTIONS FOR DUCT HEIGHTS.
2. ALL FABRIC DUCT TO HAVE ECCENTRIC SIZE TRANSITIONS, KEEPING TOP SIDE OF EACH DUCT AT COMMON HEIGHT.
3. DUCTWORK TO ENTER BUILDING ABOVE DRESSING ROOM IN EXISTING OFFICE SPACE.
4. ATTIC ACCESS TO BE MOVED TO ALLOW DUCT ROUTING SHOWN. NEW ACCESS BY OTHERS.
5. SUPPLY DUCT TO ELBOW OVER BEFORE PENETRATING EXTERIOR WALL DIRECTLY ABOVE RETURN DUCT.
6. ROUTE REFRIGERANT PIPING DOWN TO FIRST LEVEL MEETING ROOM. SEE M101 FOR CONTINUATION.
7. ROUTE REFRIGERANT LINES IN CEILING SPACE BELOW BALCONY SEATING.
8. PENETRATE WALL INTO LOBBY AREA ABOVE DROP-IN CEILING TO HIDE PIPING FROM VIEW.
9. PROVIDE 24V CONTROL DAMPER AND INTERCONNECT WITH BC FAN OPERATION. CONTROL DAMPER TO OPEN WHEN SUPPLY FAN IS IN OPERATION.
10. INSTALL STRUCTURAL LINTEL AT WALL PENETRATION FOR STRUCTURAL SUPPORT. LINTEL SIZING TO BE UNDER RESPONSIBILITY OF CONTRACTOR.

REVISIONS:

DESIGN ENGINEER: JWH
PROJECT ENGINEER: DAR
DRAWN BY: ZMN
ISSUED: 10/05/2015
OA PROJECT #: 015-0534

PROFESSIONAL MECHANICAL ENGINEER DAVID ROBERTS E-10518 STATE OF NEBRASKA
11/10/2015 2:43:22 PM

PROJECT CONSULTANTS

STRUCTURAL ENGINEER
Kirkham Michael & Associates
201 North 7th Street, Suite 200
Lincoln, NE 68508
402-476-5365

MECHANICAL/ELECTRICAL ENGINEERS
Olsson Associates
601 P Street, Suite 200
Lincoln, NE 68508
402-474-6311

City of Hastings

Hastings City Auditorium Interior Renovation

SINCLAIR hille architects
700 Q St. Lincoln, NE 68508 T: 402 476 7331 F: 402 476 8341

Second Level Mechanical Plan

SHA PROJECT NO. 15011

M102

© Copyright SINCLAIR HILLE ARCHITECTS

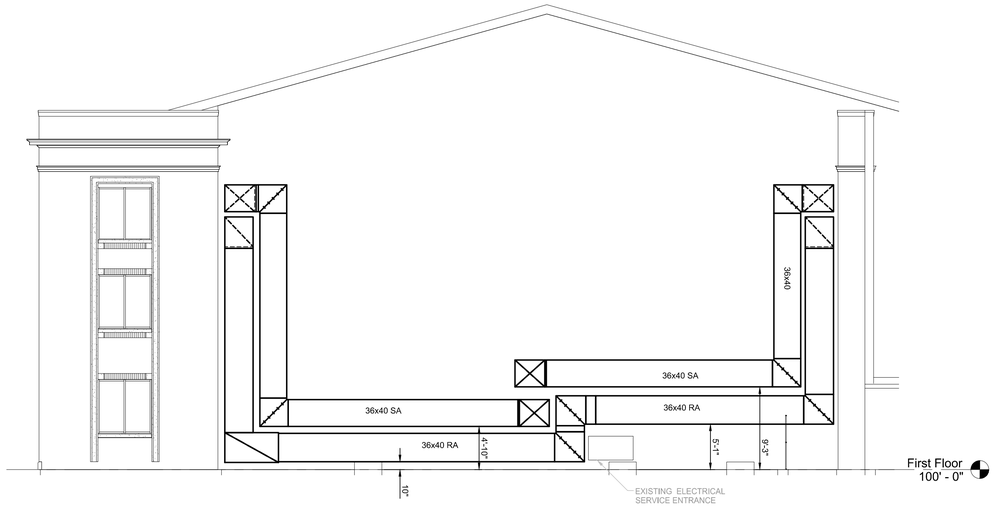

H1 EXTERIOR DUCT ROUTING - FROM EAST

SCALE: 1/8" = 1'-0"

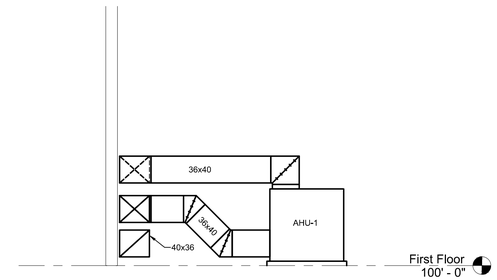

H9 EXTERIOR DUCT ROUTING - FROM SOUTH

SCALE: 1/8" = 1'-0"

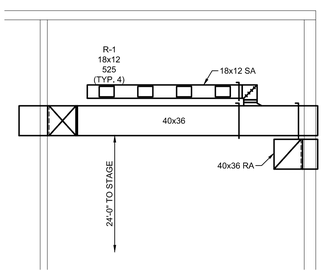

E5 NORTH STAGE AREA DUCT ROUTING

SCALE: 1/8" = 1'-0"

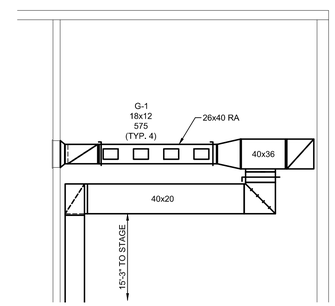

E9 NORTH STAGE AREA DUCT ROUTING

SCALE: 1/8" = 1'-0"

DESIGN ENGINEER: JWH
PROJECT ENGINEER: DAR
DRAWN BY: CFH
ISSUED: 10/05/2015
OA PROJECT #: 015-0534

REVISIONS:

PROFESSIONAL MECHANICAL ENGINEER DAVID ROBERTS E-10518 STATE OF NEBRASKA
11/10/2015 2:43:33 PM

PROJECT CONSULTANTS

STRUCTURAL ENGINEER:
Thorson Baack & Associates
201 North 7th Street, Suite 200
Lincoln, NE 68508
402-476-6365

MECHANICAL/ELECTRICAL ENGINEERS
Olsen Associates
601 P Street, Suite 200
Lincoln, NE 68508
402-474-6311

City of Hastings

Hastings City Auditorium Interior Renovation

SINCLAIR hille architects
700 Q St. Lincoln, NE 68508 T: 402 476 7331 F: 402 476 8341

Mechanical Sections

SHA PROJECT NO. 15011

M401

© Copyright SINCLAIR HILLE ARCHITECTS

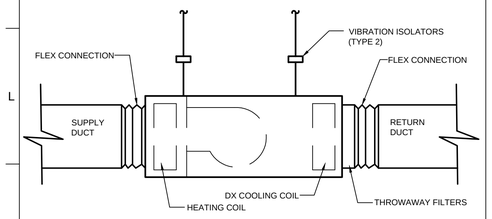

J1 BLOWER COIL UNIT DETAIL

NOT TO SCALE

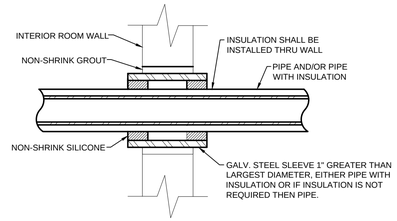

NOTES:
1. SLEEVES ARE NOT REQUIRED FOR CORE-DRILLED HOLES OR STUD WALLS.

J4 PIPE SLEEVE THRU NON-RATED INTERIOR WALL

NOT TO SCALE

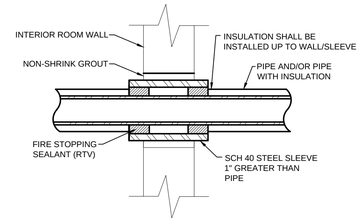

NOTES:
1. SLEEVES ARE NOT REQUIRED FOR CORE-DRILLED HOLES OR STUD WALLS.

J7 PIPE SLEEVE THRU RATED INTERIOR WALL

NOT TO SCALE

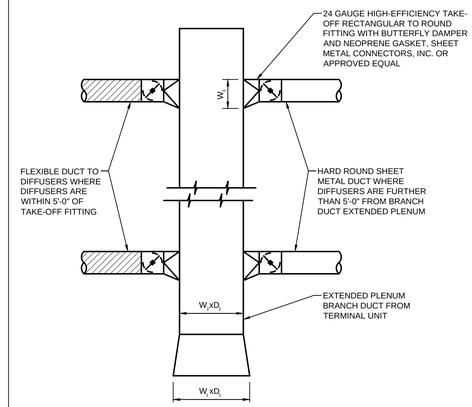

W_1 x D_1 = UPSTREAM DUCT DIMENSION FROM TERMINAL UNIT
W_2 x D_2 = DOWNSTREAM DUCT DIMENSION
W_2 = 1.3D

JI0 EXTENDED PLENUM DUCT TAKE OFF

NOT TO SCALE

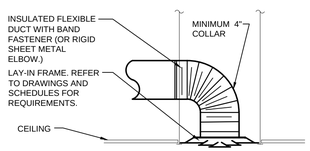

NOTES:
1. REFER TO PLANS FOR DUCT SIZES.

F1 DIFFUSER CONNECTION DETAIL

NOT TO SCALE

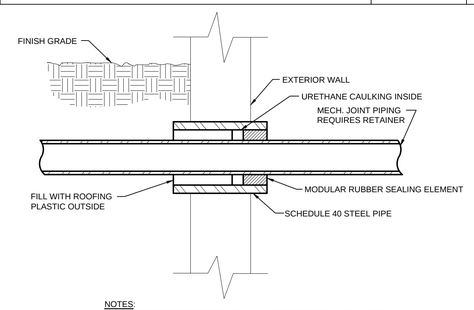

NOTES:
1. IF PIPING PASSES THROUGH WALL ABOVE GRADE, SLEEVE SHALL BE FLUSH WITH EXTERIOR SIDE OF WALL.
2. SLEEVES ARE NOT REQUIRED FOR CORE-DRILLED HOLES.

F4 PIPE SLEEVE THRU EXTERIOR WALL

NOT TO SCALE

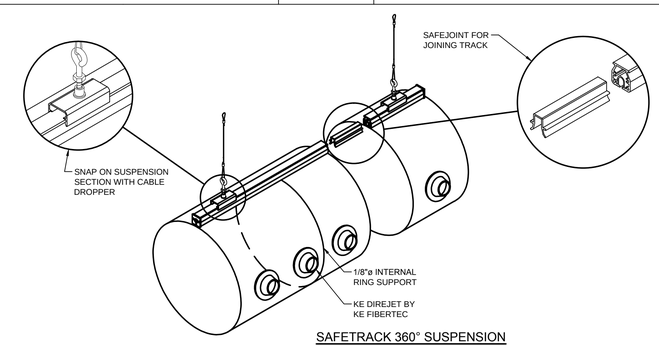

SAFETRACK 360° SUSPENSION

F8 FABRIC DUCT DETAIL

NOT TO SCALE

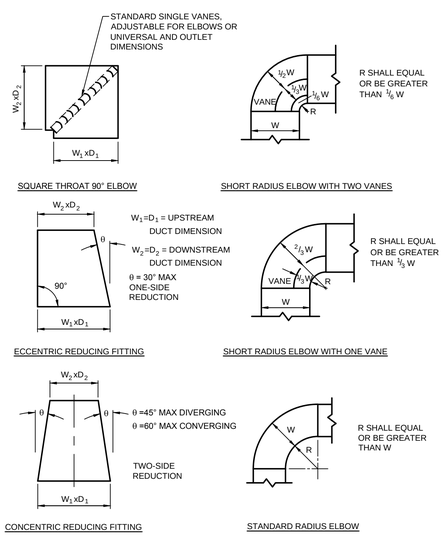

A1 SHEET METAL FITTINGS

NOT TO SCALE

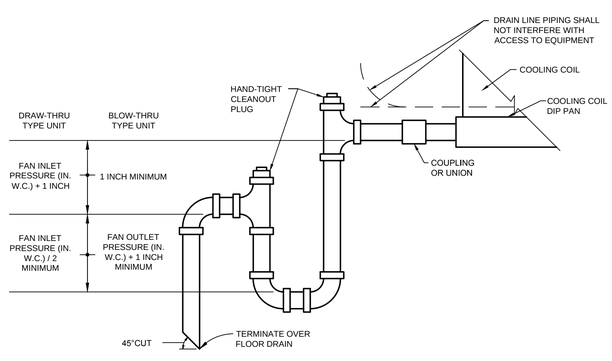

NOTES:
1. FOR EQUIPMENT WITHOUT INTERNAL CONDENSATE TRAPS,
2. PIPING TO BE COPPER, TYPE L.
3. PIPING LOCATED INDOORS TO BE INSULATED, SEE SPECS.
4. PROVIDE STANDS FOR FLOOR MOUNTED UNITS THAT NEED TO BE RAISED TO ALLOW TRAP TO BE INSTALLED.

A4 CONDENSATE TRAP DETAIL

NOT TO SCALE

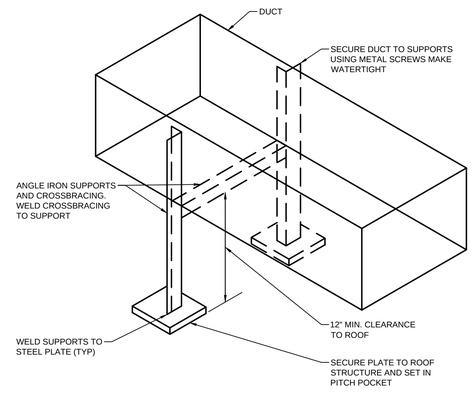

NOTE:
1. COAT ALL WELDED JOINTS W/ASPHALT EMULSION.

A8 RECTANGULAR DUCT ON ROOF DETAIL

NOT TO SCALE

REVISIONS:

DESIGN ENGINEER: JWH
PROJECT ENGINEER: DAR
DRAWN BY: ZMN
ISSUED: 10/05/2015
OA PROJECT #: 015-0534

PROFESSIONAL MECHANICAL ENGINEER DAVID A. ROBERTS E-10518 STATE OF NEBRASKA
11/10/2015 2:43:39 PM

PROJECT CONSULTANTS

STRUCTURAL ENGINEER
Kirkham Michael & Associates, Inc.
201 North 7th Street, Suite 200
Lincoln, NE 68508
402-476-6350

MECHANICAL/ELECTRICAL ENGINEERS
Olsson Associates
601 P Street, Suite 200
Lincoln, NE 68508
402-474-6311

City of Hastings

Hastings City Auditorium Interior Renovation

SINCLAIR hille architects
700 Q St. Lincoln, NE 68508 T: 402 476 7331 F: 402 476 8341

Mechanical Details

SHA PROJECT NO. 15011

M601

© Copyright SINCLAIR HILLE ARCHITECTS

PLUMBING FIXTURE SCHEDULE

TAG	TYPE	MANUFACTURER[2]	MODEL[3]	DESCRIPTION	ACCESSORIES	CONNECTIONS [1,2] WASTE	VENT	CW	HW
WC-1	WATER CLOSET WALL MOUNTED FLUSH VALVE	KOHLER	"KINGSTON" K-4325-L	ELONGATED, VITREOUS CHINA BOWL WITH SIPHON-JET DESIGN, WALL MOUNTED, 1-1/2" TOP SPUD, WALL OUTLET, 1.28 GPF.	INCLUDE BOLT CAPS MATCHING FIXTURE, KOHLER "STRONGHOLD" K-4731-GC, ELONGATED SEAT, OPEN FRONT. KOHLER K-7531 TRIPOINT WC INFRARED FLUSHOMETER. 1.28 GPF, ADA-COMPLIANT, WITH CHROME-PLATED EXPOSED PIECES.	3"	2"	1-1/4"	-
WC-2	WATER CLOSET WALL MOUNTED FLUSH VALVE ADA	KOHLER	"KINGSTON" K-4325-L	SAME AS WC-1, MOUNTED AT ADA HEIGHT.	SAME AS WC-1.	3"	2"	1-1/4"	-
WC-3	WATER CLOSET WALL MOUNTED FLUSH VALVE ADA	KOHLER	"CIMARRON" K-3609	WHITE, COMFORT HEIGHT, ELONGATED, VITREOUS CHINA BOWL, TWO-PIECE, FLOOR MOUNTED, WALL OUTLET, 1.28 GPF. K-4421 TOILET TANK. MOUNTED AT ADA HEIGHT.	INCLUDE K-4309 ELONGATED TOILET BOWL, K-4421 TOILET TANK, K-4650 TOILET SEAT, TANK COVER, TRIP LEVEL, BOLT CAP ACCESSORY PACK, AND TANK ACCESSORY PACK.	3"	2"	1-1/4"	-
U-1	URINAL WALL HUNG FLUSH VALVE	KOHLER	"BARDON" K-4991-ET	WHITE, VITREOUS CHINA, WASHOUT TYPE, WALL MOUNTED, 3/4" TOP SPUD, WALL OUTLET, 0.125 GPF.	KOHLER K-7546 TRIPOINT HES URINAL INFRARED FLUSHOMETER. 0.125 GPF, ADA COMPLIANT, WITH CHROME-PLATED EXPOSED PIECES.	2"	1-1/2"	3/4"	-
U-2	URINAL WALL HUNG FLUSH VALVE ADA	KOHLER	"BARDON" K-4991-ET	SAME AS U-1, MOUNTED AT ADA HEIGHT.	SAME AS U-1.	2"	1-1/2"	3/4"	-
CL-1	TOP-MOUNT LAVATORY ADA	KOHLER	"MARATEA" K-2831	WHITE, ENAMEL CAST-IRON, OVAL BOWL, FAUCET LEDGE AND SELF-DRAINING DECK AREA WITH CONTOURED BACK AND SIDE SPLASH SHIELDS. FAUCET HOLES SHALL BE 4" ON CENTER. NOMINAL DIMENSION OF 22-1/8"x17-1/4" BOWL DIMENSION OF 21-3/16"x11-5/16".	PROVIDE WITH CHROME-PLATED COPPER SUPPLIES WITH STOPS. PROVIDE 17 GAUGE CHROME-PLATED CAST-BRASS TRAP WITH CLEANOUT WITH 1-1/2" BRASS WASTE TO WALL. KOHLER K-15182-F, ADA-COMPLIANT, ONE-PIECE LEVER HANDLE FAUCET, 1.5 GPM SPRAY HEAD. COVER EXPOSED HOT AND COLD SUPPLIES AND WASTE PIPING WITH PROTECTIVE SHIELDING GUARD, TRUEBRO INSULATED VINYL PIPE COVERS WITH ANTI-MICROBIAL, REUSABLE FASTENERS, STOP VALVE LOCKING ACCESS COVER.	1-1/2"	1-1/4"	1/2"	1/2"
S-1	TOP-MOUNT BAR SINK	ELKAY	LR1722PD	18 GAUGE, TYP 304 NICKEL BEARING STAINLESS STEEL, FAUCET LEDGE AND SELF-DRAINING DECK AREA. FAUCET HOLES SHALL BE 4" ON CENTER. NOMINAL DIMENSION OF 17"x22x9-1/8", BOWL DIMENSION OF 13-1/2"x16x7-5/8".	PROVIDE 1-1/2" CHROME-PLATED CAST-BRASS TRAP WITH CLEANOUT AND WALL ESCUTCHEON. 1/2" CHROME-PLATED SUPPLIES WITH STOPS AND WALL ESCUTCHEONS. ELKAY LKGT3032 LEVER HANDLE, ADA COMPLIANT, CHROME-PLATED, FAUCET WITH 7-1/4" HI-ARC SWINGING, PULL-DOWN SPOUT.	1-1/2"	1-1/4"	1/2"	1/2"
FD-1	ROUND FLOOR DRAIN	ZURN	Z-415B	CAST IRON TWO PIECE BODY WITH DOUBLE DRAINAGE FLANGE, WEEP HOLES, REVERSIBLE CLAMPING COLLAR, 5" NICKEL BRONZE ADJUSTABLE STRAINER.	PROVIDE A GASKETED TRAP SEALER, BY SURE SEAL OR EQUAL, IN NECK OF FLOOR DRAIN.	2"	2"	-	-
FS-1	SQUARE FLOOR SINK	ZURN	Z-1910	8x8x6 DEEP CAST IRON BODY AND SQUARE SLOTTED MEDIUM DUTY GRATE, WITH WHITE ACID RESISTING PORCELAIN ENAMEL INTERIOR AND TOP, COMPLETE WITH WHITE ABS ANTI-SPLASH INTERIOR BOTTOM DOME STRAINER.	PROVIDE WITH 3/4 TOP GRATE. PROVIDE A GASKETED TRAP SEALER, BY SURE SEAL OR EQUAL, IN NECK OF FLOOR DRAIN.	2"	2"	-	-
EWC-1	ELECTRIC WATER COOLER SINGLE STATION ADA	ELKAY	EZSTL8C	SINGLE STATION WALL MOUNT WATER COOLER. 8 GPH AT 90°F AMBIENT, 325 WATTS, 3.7 FLA. SELF-CLOSING EASY-TOUCH CONTROLS ON THE FRONT, LEFT AND RIGHT OF EACH UNIT, AND FLEXI-GUARD SAFETY BUBBLER. ADA COMPLIANT LOW STATION.	PROVIDE CHROME-PLATED COPPER SUPPLY STOPS, CHROME-PLATED CAST-BRASS TRAP WITH CLEANOUT (0.045" THICK TUBULAR BRASS WASTE TO WALL) AND WALL ESCUTCHEONS.	1-1/2"	1-1/4"	1/2"	-

REMARKS:
1. VERIFY ALL CONNECTIONS & MOUNTING HEIGHTS WITH CODES, MANUFACTURERS, AND PLANS.
2. SIZES LISTED INDICATE MIN. SIZE ONLY, SEE PLUMBING RISERS AND FLOOR PLANS FOR LARGER SIZES.
3. SEE SPECIFICATIONS FOR LISTS OF ALTERNATE MANUFACTURES.

PF

UNIT HEATERS (ELECTRIC)

MARK	LOCATION	ELECTRIC COIL DATA CFM	KW	MBH	EAT (°F)	LAT (°F)	ELECTRICAL DATA VOLT	PH	HZ	AMPS	MOUNTING HEIGHT	MANUFACTURER & MODEL	REMARKS
UH-1	STAIR 1 - 105	100	2	7.7	50	112	240	1	60	9.4	CEILING	MARKEL H30522T2DWB	1,2,3,4
UH-2	STAIR 2 - 109	100	2	7.7	50	112	240	1	60	9.4	CEILING	MARKEL H30522T2DWB	1,2,3,4

REMARKS:
1. 18 GAUGE, POWDER COATED STEEL AND ALUMINUM FRONT.
2. MANUAL RESET THERMAL LIMIT.
3. PROVIDE WITH DISCONNECT SWITCH.
4. PROVIDE WITH UNIT MOUNTED THERMOSTAT.

UHE

BLOWER COILS w/ ELECTRIC HEAT

MARK	CFM	OA CFM	E.S.P. IN. WG	ELEC HEAT @ 240V / 3ø (KW)	MBH	MOTOR DATA HP	VOLT	PH	MANUFACTURER & MODEL	REMARKS
BC-1	1745	75	0.5	20	68	1	240	1	LENNOX CBX27UH-048	1,2,3,4,5,6,7
BC-2	1745	75	0.5	20	68	1	240	1	LENNOX CBX27UH-048	1,2,3,4,5,6,7

REMARKS:
1. EAT SHALL BE 73.5° DB / 60.6° WB.
2. PROVIDE 3ø SINGLE POINT POWER SUPPLY KIT. MCA=70, MCOP=70. UNIT WILL CONVERT TO 1ø WHERE REQUIRED.
3. FOLLOW MANUFACTURER INSTALLATION REQUIREMENTS FOR INSULATION AND PIPING KIT FOR DEHUMIDIFICATION COIL INSTALLATIONS.
4. PROVIDE UNIT MOUNTED DISCONNECT.
5. PROVIDE UNIT WITH VIBRATION ISOLATION.
6. PROVIDE WITH INSULATED LINE SET.
7. PROVIDE WITH THROWAWAY FILTER.
8. PROVIDE WITH 7 DAY PROGRAMMABLE THERMOSTAT.

BC

SPLIT SYSTEM INDOOR UNITS

MARK	SERVES	CAPACITY (TONS) AT ARI CONDITIONS	SEER	CFM	ELECTRICAL DATA VOLTS	PHASE	MCA	MANUFACTURER & MODEL	REMARKS
AC-1	MEETING ROOM	1.5	17.2	560	208	1	0.40	DAIKIN FCQ18PAVJU	1,2,3

REMARKS:
1. PROVIDE WIRED T-STAT, INSTALL ON WALL NEXT TO LIGHT SWTICH.
2. WASHABLE FILTER.
3. PROVIDE INSULATED LINE SET.

SSIU

AIR DISTRIBUTION DEVICES

MARK	SERVES	COLOR	DAMPER	PATTERN	MAX NC	MAX PD IN WC	MANUFACTURER & MODEL	REMARKS
CD-1	SUPPLY	WHITE	OBD	360"	25	0.1	TITUS OMNI (24x24 FACE)	1,2,3
RA-1	RETURN	WHITE	-	PERFORATED	25	0.1	TITUS PAR (24x24 FACE)	1,2,3,7
R-1	SUPPLY	WHITE	OBD	DOUBLE DEFL.	25	0.1	TITUS 300 RS	1,2,3,4,6,8
G-1	RETURN	WHITE	-	SINGLE DEFL	25	0.1	TITUS 350 RL	1,2,3,4,5,6,8

REMARKS:
1. VERIFY BORDER TYPE REQUIRED.
2. NECK SIZE INDICATED ON PLANS.
3. STEEL CONSTRUCTION.
4. 3/4" BLADE SPACING.
5. FRONT BLADES PARALLEL WITH LONG DIMENSION.
6. SIZE INDICATED ON PLANS.
7. PERFORATED FACE TO BE FLUSH WITH CEILING.
8. FLAT BLACK PAINT SHALL BE PROVIDED BEHIND DEVICES THAT SHOW DUCTWORK, ELEC. CONDUITS, STRUCTURAL, PIPING, ETC.

ADD

OUTDOOR HEAT PUMP

MARK	SERVES	TONS	AHRI SEER	REFRIG TYPE	AMBIENT TEMP	COOLING CAP (KBTUH) TOTAL	SENSIBLE	ELECTRICAL VOLT	PH	MANUFACTURER & MODEL	REMARKS
HP-1	BC-1	4	15	R-410A	95	48.5	47.8	240	3	LENNOX TPA048H4-230	1,2,3,4,5
HP-2	BC-2	4	15	R-410A	95	48.5	47.8	240	3	LENNOX TPA048H4-230	1,2,3,4,5
HP-3	AC-1	1.5	17.2	R-410A	95	18	14.1	208	1	DAIKIN RZQ18PVJU9	1,3,4,5,6

REMARKS:
1. HEATING CAPACITY OF 47 MBH AT 47°F (3.50 COP).
2. PROVIDE 30°F LOW AMBIENT KIT.
3. UNIT TO BE PROVIDED WITH HAIL GUARD AND COIL GRILLE FOR PROTECTION OF COIL FROM IMPACT.
4. PROVIDE UNIT MOUNTED DISCONNECT.
5. MOUNT UNIT ON POLYETHYLENE BASE.
6. PROVIDE 0° F LOW AMBIENT KIT.

MISCELLANEOUS MECHANICAL SCHEDULES:

A. BRICK VENT (BV-1): GREENHECK BVF RAIN AND WEATHER-RESISTANT, EXTRUDED ALUMINUM BRICK VENT. 8-1/8"W x 4-3/4"H, 1/8" WALL AND BLADE THICKNESS, INSECT SCREEN, AND HIGH WATER STOP AT THE REAR. PROVIDE WITH STRAIGHT DUCT OPTION FOR THICKER WALLS AND INSTALL 24V MOTORIZED DAMPER JUST PAST EXTERIOR WALL. DAMPER SHALL BE INTERCONNECTED WITH HVAC UNIT BLOWER.

REVISIONS:

DESIGN ENGINEER: JWH
PROJECT ENGINEER: DAR
DRAWN BY: ZMN
ISSUED: 10/05/2015
OA PROJECT #: 015-0534

PROFESSIONAL MECHANICAL ENGINEER DAVID A. ROBERTS E-10518 STATE OF NEBRASKA
11/10/2015 4:48:58 PM

PROJECT CONSULTANTS

STRUCTURAL ENGINEER:
Nelson & Associates, P.C.
201 North 7th Street, Suite 200
Lincoln, NE 68508
402-476-6365

MECHANICAL/ELECTRICAL ENGINEERS:
Olsson Associates
601 P Street, Suite 200
Lincoln, NE 68508
402-474-6311

City of Hastings

Hastings City Auditorium Interior Renovation

SINCLAIR | hille architects
700 Q St. Lincoln, NE 68508 T: 402 476 7331 F: 402 476 8341

Mechanical Schedules

SHA PROJECT NO. 15011

M701

© Copyright SINCLAIR HILLE ARCHITECTS

AIR HANDLING UNITS

MARK	CFM	OA	DIMENSIONS			ELECTRICAL DATA					FILTER SECION			MANUFACTURER & MODEL	REMARKS
			L	W	H	V	HZ	PH	MCA	MROPD	TYPE	EFF %	APD		
AHU-1	38,000	10,322	523"	99"	97"	230	60	3	529.3	600	MERV 8	30	0.15	DAIKIN RPS101D	1,2,3,4,5,6,7,8,9,10

REMARKS:
1. PROVIDE SMOKE DETECTOR WITH RELAY ON UNIT.
2. PROVIDE 100% INTEGRATED ECONOMIZER WITH ENTHALPY CONTROLS.
3. PROVIDE UNIT WITH UNPOWERED 115 VOLT RECEPTACLE AND FUSED DISCONNECT SWITCH.
4. CONCRETE CURB PROVIDED BY OTHERS.
5. PROVIDE BAROMETRIC RELIEF DAMPER WITH WEATHERPROOF HOOD.
6. PROVIDE INTERNAL VIBRATION ISOLATION.
7. PROVIDE HAIL GUARD.
8. PROVIDE WITH HOT GAS REHEAT OPTION FOR DEHUMIDIFICATION CONTROL.
9. FULL DOUBLE WALL CONSTRUCTION WITH R-6.5 INSULATION.
10. PRE-PAINTED EXTERIOR CABINET PANELS.

AHU HEATING DATA

SERVES	TYPE	GAS HEAT SECTION				DX HOT GAS REHEAT COIL SECTION			REMARKS
		INPUT CAPACITY	OUTPUT CAPACITY	EAT °F	LAT °F	TOTAL CAPACITY	EAT °F	LAT °F	
AHU-1	NATURAL GAS	1875	1500	55.0	93.4	800	54.8	75.5	1

REMARKS:
1. AIRFLOW REPRESENTS FAN DESIGN POINT.

AHU COOLING DATA

SERVES	TYPE	REFRIGERANT TYPE	CAPACITY		ENTERING AIR TEMP		ENTERING AIR TEMP		AMBIENT AIR TEMP	REMARKS
			TOTAL	SENSIBLE	DRY BULB	WET BULB	DRY BULB	WET BULB		
AHU-1	DX	R-410A	1231	922	78.2	65.8	54.8	54.6	95	1,2,3,4,5,6,7

REMARKS:
1. AIRFLOW REPRESENTS FAN DESIGN POINT.
2. MULTI-STAGE COOLING.
3. ANTI-SHORT CYCLING CONTROLS ON COMPRESSORS.
4. FILTER-DRYER ON COMPRESSOR REFRIGERANT SYSTEM
5. HIGH & LOW PRESSURE SWITCHES ON REFRIGERANT SYSTEMS.
6. INCLUDE CRANKCASE HEATER AND FREEZE STAT WITH UNIT.
7. INCLUDE QUIET CONDENSING UNIT OPTION.

AHU FAN DATA

MARK	SYSTEM	CFM	ESP (IN H2O)	FAN TYPE	FAN RPM	MOTOR		REMARKS
						HP	BHP	
RF-1	AHU-1 (OUTSIDE/RETURN AIR)	36,000	1.0	SWSI AF	873	25	20.81	1,2,3,4,5
SF-1	AHU-1 (SUPPLY AIR)	36,000	2.0	AF DWDI	1007	40	38.44	1,2,3,4,5

REMARKS:
1. BELT DRIVE.
2. AIRFLOW REPRESENTS FAN DESIGN POINT.
3. PROVIDE WITH FACTORY MOUNTED VARIABLE FREQUENCY DRIVES.
4. PROVIDE UNIT DISCONNECT SWITCH.
5. INSTALL BIRD SCREEN ON OUTSIDE AIR INLET TO FAN.

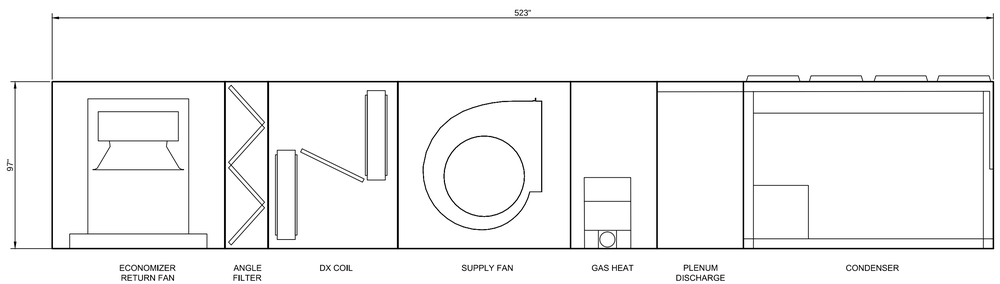

AHU-1 SEQUENCE OF OPERATIONS

A. OCCUPIED (TEMPERATURE CONTROL): DURING OCCUPIED PERIODS, THE SUPPLY FAN WILL VARY BETWEEN 50% (ADJ.) AND 100% CFM BASED ON HEATING/COOLING OUTPUT, AND THE OUTSIDE AIR DAMPER WILL OPEN TO MAINTAIN MINIMUM VENTILATION REQUIREMENTS AS DESCRIBED IN 'CO2 CONTROL' PARAGRAPH BELOW. IF HEATING OR COOLING IS RUNNING AT LESS THAN 50%, OR THE UNIT IS NOT HEATING/COOLING, THE FAN SHALL STAY AT 50% CFM. THE DX COOLING AND GAS HEAT WILL STAGE TO MAINTAIN THE ROOM AIR TEMPERATURE SETPOINT. IF THE SPACE TEMPERATURE SENSOR FAILS, THE DX COOLING AND GAS HEAT WILL DE-ENERGIZE AND AN ALARM WILL BE ANNUNCIATED.

B. UNOCCUPIED (NIGHT SETBACK): WHEN THE SPACE TEMPERATURE IS BELOW THE UNOCCUPIED HEATING SETPOINT (60°F ADJ.), THE SUPPLY FAN WILL START. THE OUTSIDE AIR DAMPER WILL REMAIN CLOSED, AND THE GAS HEAT WILL STAGE ON. WHEN THE SPACE TEMPERATURE RISES ABOVE THE UNOCCUPIED HEATING SETPOINT (60°F ADJ) PLUS THE UNOCCUPIED DIFFERENTIAL (4°F ADJ), THE SUPPLY FAN WILL STOP AND THE GAS HEAT WILL DE-ENERGIZE. WHEN THE SPACE TEMPERATURE IS ABOVE THE UNOCCUPIED COOLING SETPOINT 85°F (ADJ), THE SUPPLY FAN WILL START, THE OUTSIDE AIR DAMPER WILL REMAIN CLOSED, AND THE DX COOLING WILL STAGE ON. WHEN THE SPACE TEMPERATURE FALLS BELOW THE UNOCCUPIED COOLING SETPOINT (85°F ADJ) MINUS THE UNOCCUPIED DIFFERENTIAL (4°F ADJ), THE SUPPLY FAN WILL STOP AND THE DX COOLING WILL DE-ENERGIZE.

C. MORNING WARM-UP: DURING OPTIMAL START, IF THE SPACE TEMPERATURE IS BELOW THE OCCUPIED HEATING SETPOINT, A MORNING WARM-UP SEQUENCE WILL BE ACTIVATED. THE SUPPLY FAN WILL START, THE GAS HEAT WILL STAGE ON, AND THE OUTSIDE AIR DAMPER WILL REMAIN CLOSED. MODE WILL TERMINATE WHEN THE SPACE TEMPERATURE REACHES THE OCCUPIED HEATING SETPOINT OR THE OCCUPIED TIME PERIOD HAS STARTED.

D. MORNING COOL-DOWN: DURING OPTIMAL START, IF THE SPACE TEMPERATURE IS ABOVE THE OCCUPIED COOLING SETPOINT, A MORNING COOL-DOWN SEQUENCE WILL BE ACTIVATED. THE SUPPLY FAN WILL START, DX COOLING WILL STAGE ON, AND THE OUTSIDE AIR DAMPER WILL REMAIN CLOSED. MODE WILL TERMINATE WHEN THE SPACE TEMPERATURE REACHES THE OCCUPIED COOLING SETPOINT OR THE OCCUPIED TIME PERIOD HAS STARTED.

E. ECONOMIZER DAMPER CONTROL: WHEN THE OUTDOOR AIR DRY BULB / WET BULB (ENTHALPY) CONDITIONS ARE FAVORABLE, THE OUTDOOR AIR & RELIEF AIR DAMPERS AND MECHANICAL COOLING WILL BE CONTROLLED TO MAINTAIN THE ROOM TEMPERATURE AT SETPOINT. MECHANICAL COOLING WILL BE LOCKED OUT AND THE OUTDOOR AIR AND RELIEF AIR DAMPERS WILL MODULATE BETWEEN THE MINIMUM POSITION AND 100% OPEN TO ALLOW OUTDOOR AIR TO BE DELIVERED FOR FREE COOLING. IF THE DAMPERS REACHES 100% OPEN AND THE SUPPLY AIR TEMPERATURE SETPOINT CAN NOT BE MAINTAINED USING OUTDOOR AIR ALONE, THE DAMPERS WILL BE HELD 100% OPEN AND MECHANICAL COOLING WILL BE ENABLED. WHEN THE OUTDOOR AIR DRY BULB / WET BULB (ENTHALPY) CONDITIONS ARE NOT FAVORABLE, THE OUTDOOR AIR AND RELIEF AIR DAMPER WILL BE CONTROLLED TO MINIMUM POSITION AND MECHANICAL COOLING WILL BE CONTROLLED TO MAINTAIN THE SUPPLY AIR TEMPERATURE AT SETPOINT.

F. CO2 CONTROL (DEMAND CONTROLLED VENTILATION): IF THE CO2 SENSOR INPUT IS LESS THAN THE SETPOINT WHEN THE UNIT IS OCCUPIED AND THE FAN IS RUNNING, THEN THE OUTSIDE AIR AND RELIEF AIR DAMPERS WILL BE AT ZERO UNLESS ECONOMIZING. HOWEVER, IF THE CO2 READING RISES ABOVE THE SETPOINT, THE OUTSIDE AIR DAMPER WILL MODULATE OPEN UP TO THE MAXIMUM OA CFM SCHEDULED TO ADJUST CO2 LEVELS BELOW THE SETPOINT.

G. FILTER STATUS: A DIFFERENTIAL PRESSURE SWITCH WILL MONITOR THE DIFFERENTIAL PRESSURE ACROSS THE FILTER WHEN THE FAN IS RUNNING. IF THE SWITCH CLOSES DURING NORMAL OPERATION A DIRTY FILTER ALARM WILL BE ANNUNCIATED.

A6 | AHU-1 ELEVATION AND SEQUENCE OF OPERATIONS

NOT TO SCALE

REVISIONS:

DESIGN ENGINEER: JWH
PROJECT ENGINEER: DAR
DRAWN BY: ZMN
ISSUED: 10/05/2015
OA PROJECT #: 015-0534

PROFESSIONAL MECHANICAL ENGINEER DAVID A. ROBERTS E-10518 STATE OF NEBRASKA
11/10/2015 2:43:47 PM

PROJECT CONSULTANTS
STRUCTURAL ENGINEER
Nelson & Associates, P.C.
201 North 7th Street, Suite 200
Lincoln, NE 68508
402-476-5365

MECHANICAL/ELECTRICAL ENGINEERS
Olsson Associates
601 P Street, Suite 200
Lincoln, NE 68508
402-474-6311

City of Hastings

Hastings City Auditorium Interior Renovation

SINCLAIR hille architects
700 Q St. Lincoln, NE 68508 T: 402.476.7331 F: 402.476.6341

Mechanical Schedules

SHA PROJECT NO. 15011

M702

© Copyright SINCLAIR HILLE ARCHITECTS

ELECTRICAL SYMBOL LEGEND

POWER DEVICES

DUPLEX RECEPTACLE; MOUNT AT 18" TO CENTER OF DEVICE AFF UNLESS OTHERWISE NOTED.	
SINGLE RECEPTACLE; MOUNT AT 18" TO CENTER OF DEVICE AFF UNLESS OTHERWISE NOTED.	
FOUR PLEX RECEPTACLE; MOUNT AT 18" TO CENTER OF DEVICE AFF UNLESS OTHERWISE NOTED.	
GFI	GROUND FAULT INTERRUPTER DUPLEX RECEPTACLE
	DUPLEX RECEPTACLE-ONE OUTLET SWITCHED
	DUPLEX RECEPTACLE- ON EMERGENCY CIRCUIT
	FOUR PLEX RECEPTACLE. ON EMERGENCY CIRCUIT
WP	WATERPROOF RECEPTACLE
IG	ISOLATED GROUND RECEPTACLE
	220 VOLT RECEPTACLE
	FLOOR MOUNTED DUPLEX RECEPTACLE
A	SPECIAL-PURPOSE OUTLET. LETTER DESIGNATES TYPE, SEE SPECIAL CONNECTION SCHEDULE FOR REQUIREMENTS
	SURFACE RACEWAY WITH OUTLETS AS INDICATED ON PLANS, MOUNTED AT 18" TO CENTER OF DEVICE AFF UNLESS OTHERWISE NOTED

	HEAT TAPE FOR GUTTERS
	FOUR PLEX RECEPTACLE, FLOOR MOUNTED
	DUPLEX RECEPTACLE, CEILING MOUNTED
	MULTI-OUTLET FLOOR BOX, SEE FLOOR BOX SCHEDULE FOR REQUIREMENTS
	SURFACE MOUNTED POWER PANEL
	RECESSED MOUNTED POWER PANEL
	SPECIAL-PURPOSE ELECTRICAL PANEL OR EQUIPMENT
	ELECTRICAL POWER TRANSFORMER
	MAGNETIC STARTER
	NON-FUSED DISCONNECT SWITCH
	COMBINATION MAGNETIC STARTER AND DISCONNECT SWITCH
	COMBINATION MAGNETIC STARTER AND DISCONNECT SWITCH
XX	ELECTRICAL MOTOR: NUMBER ON SIDE INDICATES MOTOR SIZE.
	CEILING MOUNTED JUNCTION BOX
	WALL OR FLOOR MOUNTED JUNCTION BOX
	RELAY
	BATTERY PACK
	METER PEDESTAL

LIGHTING

	CEILING MOUNTED OR RECESSED LIGHT FIXTURE; LABEL INDICATES FIXTURE TYPE
	PENDANT MOUNTED LIGHT FIXTURE; LABEL INDICATES FIXTURE TYPE
	WALL MOUNTED LIGHT FIXTURE; LABEL INDICATES FIXTURE TYPE
	2'x4' FLUORESCENT LIGHT FIXTURE; LABEL INDICATES FIXTURE TYPE
	2'x2' FLUORESCENT LIGHT FIXTURE; LABEL INDICATES FIXTURE TYPE
	1'x4' TYPICAL CEILING MOUNTED FLUORESCENT FIXTURE; LABEL INDICATES FIXTURE TYPE
	1'x4' TYPICAL PENDANT MOUNTED FLUORESCENT FIXTURE; LABEL INDICATES FIXTURE TYPE
	1'x4' TYPICAL WALL MOUNTED FLUORESCENT FIXTURE; LABEL INDICATES FIXTURE TYPE
	1'x2' TYPICAL WALL MOUNTED FLUORESCENT FIXTURE; LABEL INDICATES FIXTURE TYPE
	FLUORESCENT STRIP LIGHT FIXTURE; LABEL INDICATES FIXTURE TYPE
	1'x4' TYPICAL CEILING MOUNTED FLUORESCENT FIXTURE - NORMAL/EMERGENCY
	2'x4' TYPICAL FLUORESCENT FIXTURE - NORMAL/EMERGENCY
	2'x2' TYPICAL FLUORESCENT FIXTURE - NORMAL/EMERGENCY
	CEILING MOUNTED OR RECESSED TYPICAL FIXTURE - NORMAL/EMERGENCY
	COMBINATION EXIT AND EMERGENCY LIGHT
X	SINGLE ARM MOUNT AREA LIGHT, LETTER INDICATES FIXTURE TYPE

X X	DOUBLE FACED CEILING OR WALL-MOUNTED, EXIT SIGN WITH EMERGENCY POWER BACK UP.
X X	SINGLE FACED CEILING OR WALL-MOUNTED, EXIT SIGN WITH EMERGENCY POWER BACK UP.
	DIRECTION ARROW FOR EMERGENCY LIGHT
XX	CEILING OR WALL-MOUNTED, SELF-CONTAINED EMERGENCY LIGHT UNIT; FIXTURE SHALL MONITOR LIGHTING CIRCUIT IN AREA.
	BRANCH CIRCUIT CONCEALED IN WALLS OR CEILING
	BRANCH CIRCUIT EXPOSED
S	SINGLE-POLE SWITCH
S^2	DOUBLE-POLE SWITCH
S^3	3-WAY SWITCH
S^4	4-WAY SWITCH
S^P	SINGLE-POLE SWITCH AND PILOT LIGHT
S^{TE}	SINGLE POLE MANUAL MOTOR STARTER WITH THERMAL ELEMENT
S^D	SINGLE-POLE DIMMER SWITCH
S^K	SINGLE-POLE KEYED SWITCH
S^L	LOW VOLTAGE SWITCH
S^F	FAN SWITCH
S^M	MOMENTARY CONTACT SWITCH
	PUSHBUTTON SWITCH
	COMBINATION PUSHBUTTON SWITCH
	MUSHROOM EMERGENCY SHUT-OFF SWITCH.
	EYE SENSOR FOR AUTOMATIC DOOR OPENER
	LIGHTING CONTACTOR
	TIME CLOCK, AS INDICATED ON PLANS
	PHOTO CELL, AS INDICATED ON PLANS

SPECIAL SYSTEMS

	FLOOR MOUNTED DATA/TELEPHONE OUTLET
	COMBINATION DATA/TELEPHONE OUTLET
	PLAIN TELEPHONE
	DATA OUTLET; NUMBER INDICATES QUANTITY, BLANK INDICATES SINGLE OUTLET. MOUNTED AT 18" TO CENTER OF DEVICE AFF UNLESS OTHERWISE NOTED.
	DATA, CEILING MOUNTED
	DATA, FLOOR MOUNTED
	MULTI-OUTLET FLOOR BOX, SEE FLOOR BOX SCHEDULE FOR REQUIREMENTS
	TELEVISION CABLE OUTLET; MOUNT AT 18" TO CENTER OF DEVICE AFF UNLESS OTHERWISE NOTED.
	TELEVISION CABLE OUTLET; MOUNT AT 18" TO CENTER OF DEVICE AFF UNLESS OTHERWISE NOTED.
	WALL-MOUNTED SOUND SYSTEM SPEAKER
	CEILING-MOUNTED SOUND SYSTEM SPEAKER
	CLOCK, WALL MOUNT

DF	DOUBLE FACE CLOCK, WALL MOUNT
	CLOCK, CEILING MOUNT
S	SKELETON CLOCK
	INTERCOM WALL MOUNTED SPEAKER
	INTERCOM CEILING MOUNTED SPEAKER
	INTERCOM WALL MOUNTED - PUSH BUTTON
	PROGRAM BELL
	EMERGENCY BELL
	CABLE TRAY
	BELL
	INTERIOR SIREN ALARM
	INSTRUMENT DEVICE
	ELECTRIC VALVE
WAP	WIRELESS ACCESS POINT

FIRE ALARM

	FIRE ALARM MAGNETIC DOOR HOLD DEVICE.
	SPRINKLER FIRE ALARM FLOW SWITCH
	SPRINKLER FIRE ALARM TAMPER SWITCH
	MASTER FIRE ALARM PULL BOX
	EXTERIOR REMOTE FIRE ALARM FLASHING STROBE LIGHT
	FIRE ALARM CONTROL PANEL
	MANUAL FIRE ALARM PULL STATION; MOUNT ACCORDING TO MOUNTING HEIGHT DETAIL AT 46" TO CENTER OF DEVICE AFF. ADA COMPLIANT
	FIRE ALARM HORN & STROBE; MOUNT SO BOTTOM OF DEVICE IS AT 80" AFF UNLESS OTHERWISE NOTED. ADA COMPLIANT
	FIRE ALARM STROBE; MOUNT SO BOTTOM OF DEVICE IS AT 80" AFF UNLESS OTHERWISE NOTED. ADA COMPLIANT

	FIRE ALARM SPEAKER & STROBE; MOUNT SO BOTTOM OF DEVICE IS AT 80" AFF UNLESS OTHERWISE NOTED. ADA COMPLIANT
	SMOKE DETECTOR
	DUCT MOUNTED SMOKE DETECTOR
	THERMAL HEAT DETECTOR
	FIRE ALARM POST INDICATOR VALVE
SD	SMOKE DAMPER
FD/SD	FIRE SMOKE DAMPER
	FIRE ALARM BELL
	FIRE ALARM FAN SHUTDOWN RELAY WITH REMOTE TEST SWITCH
	FIRE ALARM FAN SHUTDOWN RELAY AND TEST SWITCH
	REMOTE ANNUNCIATOR PANEL

SECURITY DEVICES

	ELECTRIC DOOR STRIKER
	VIDEO CAMERA, WITH MOUNTING HARDWARE
	VIDEO MONITOR
	VIDEO RECORDER
	PASSIVE INFRARED MOTION SENSOR

	CARD READER
	CEILING MOUNTED MOTION DETECTOR
	WALL MOUNTED MOTION DETECTOR
	BALANCE MAGNETIC SWITCH

ABBREVIATIONS/MODIFIERS

X	SHEET NOTE TAG, LABEL INDICATES NOTE NUMBER
A	AMPERE
C	CONDUIT
P	POLE
W	WIRE
T	TELEPHONE SERVICE
FA	FIRE ALARM
NF	NON-FUSED
WP	WEATHERPROOF
C/B	CIRCUIT BREAKER
AFF	ABOVE FINISHED FLOOR
AFG	ABOVE FINISHED GRADE
CIR	CIRCUIT
XFMR	TRANSFORMER
MD	MOTORIZED DAMPER
PE	PRIMARY ELECTRIC SERVICE
SE	SECONDARY ELECTRIC SERVICE
RTU	ROOFTOP UNIT
TCP	TEMPERATURE CONTROL PANEL
SD	SMOKE DAMPER
IG	ISOLATED GROUND
RMC	RIGID METALLIC CONDUIT
EMT	ELECTRIC METALLIC TUBING
AD	AUTOMATIC DAMPER
UGE	UNDERGROUND ELECTRICAL
FMC	FLEXIBLE METALLIC TUBING
TV	TELEVISION
PVC	POLYVINYL CHLORIDE CONDUIT
EF	EXHAUST FAN
REF	ROOF EXHAUST FAN
AHU	AIR HANDLING UNIT
CUH	CABINET UNIT HEATER
EWC	ELECTRIC WATER COOLER
EWH	ELECTRIC WATER HEATER
GFI	GROUND FAULT INTERRUPTER
MAU	MAKE-UP AIR UNIT
WG	WIRE GUARD
S&P	SPACE AND PROVISION
E	EXISTING DEVICES TO REMAIN
RE	REMOVE EXISTING
RL	RELOCATE EXISTING
ER	NEW LOCATION OF EXISTING RELOCATED
NL	NIGHT LIGHT
NR	NEW TO REPLACE EXISTING
RR	REMOVE AND REPLACE ON NEW SURFACE
	HATCHING INDICATED DEVICES TO BE REMOVED.
*	ABOVE COUNTER
ATS	AUTOMATIC TRANSFER SWITCH
VFC	VARIABLE FREQUENCY CONTROLLER
VFD	VARIABLE FREQUENCY DRIVE
UGE	UNDERGROUND ELECTRICAL

GENERAL NOTES:

A. THE ELECTRICAL INSTALLATION SHALL CONFORM TO THE LATEST EDITION OF NFPA 70 (NEC), NFPA 780, ALL APPLICABLE LOCALLY ADOPTED BUILDING, AND ENERGY CODES.

B. COORDINATE THE CONNECTIONS OF ALL EQUIPMENT PROVIDED BY OTHERS WITH THE CONTRACTOR PROVIDING THE EQUIPMENT PRIOR TO ROUGH-IN. THIS INCLUDES, BUT IS NOT LIMITED TO, MECHANICAL EQUIPMENT, KITCHEN EQUIPMENT, AUDIO/VISUAL EQUIPMENT, FIRE SUPPRESSION SYSTEM EQUIPMENT, FIRE ALARM EQUIPMENT, ETC. THE ELECTRICAL CONTRACTOR IS SHALL PROVIDE THE APPROPRIATE DISCONNECTING MEANS FOR THE EQUIPMENT AND SHALL MAKE THE FINAL CONNECTION TO THE EQUIPMENT. THE ELECTRICAL CONTRACTOR SHALL PROVIDE AN APPROPRIATE CORD AND PLUG FOR ANY EQUIPMENT THAT REQUIRES AN INTEGRAL CORD AND PLUG IF NOT PROVIDED WITH THE EQUIPMENT.

C. WHERE A MECHANICAL AIR PLENUM CEILING RETURN IS PRESENT, ALL EQUIPMENT AND MATERIALS PROVIDED WITHIN THE PLENUM CEILING RETURN MUST MEET THE FLAME SPREAD AND SMOKE DEVELOPED RATINGS OF 25/50 AND BE APPROVED FOR USE IN PLENUM RETURN CEILINGS. METAL HOUSED LUMINAIRES MEET THIS REQUIREMENT AND ARE NOT REQUIRED TO BE PLENUM RATED, UNLESS OTHERWISE NOTED.

D. VERIFY EXACT LOCATION AND MOUNTING HEIGHTS OF ALL WIRING DEVICES WITH CABINET AND ROOM LAYOUT PRIOR TO ROUGH-IN. REFER TO ARCHITECTURAL PLANS AND INTERIOR ELEVATIONS.

E. REFER TO LIGHTING CONTROL DIAGRAMS AND/OR PANEL SCHEDULES FOR DESIGNATED LIGHTING CONTROL CIRCUITS.

F. THE ELECTRICAL CONTRACTOR SHALL PRESERVE THE FIRE RATING OF ANY FIRE-RATED WALL, CEILING OR FLOOR BY PROVIDING A UL LISTED FIRE-RATED ASSEMBLY. COORDINATE FIRE-RATED WALL, CEILING, OR FLOOR ASSEMBLY LOCATIONS WITH THE ARCHITECTURAL DRAWINGS.

G. ALL EQUIPMENT, DEVICES, AND LUMINAIRES SHALL BE SUITABLE FOR THE ENVIRONMENT IN WHICH THEY ARE INSTALLED. EQUIPMENT MOUNTED OUTDOORS SHALL BE NEMA 3R. DEVICES MOUNTED IN DAMP OR WET LOCATIONS SHALL BE WEATHERPROOF. 120V RECEPTACLES RATED 15 OR 20 AMPS SHALL BE GFCI PROTECTED AND EQUIPPED WITH A "WHILE-IN-USE" COVER WHERE THEY ARE LOCATED IN DAMP OR WET LOCATIONS.

H. ALL LUGS, TERMINALS, ETC. IN ELECTRICAL DISTRIBUTION EQUIPMENT SHALL BE LISTED FOR A MINIMUM OF 75 DEGREE C CONDUCTORS. TERMINATIONS LISTED FOR ONLY 60 DEGREE C CONDUCTORS ARE NOT PERMITTED.

I. CIRCUITS SERVING EMERGENCY LIGHTING EQUIPMENT SUCH AS EMERGENCY BATTERIES SHALL NOT SHARE A NEUTRAL (SHALL NOT BE PART OF A MULTIWIRE BRANCH CIRCUIT) WITH ANY OTHER CIRCUIT. PROVIDE A SEPARATE NEUTRAL FOR EVERY CIRCUIT THAT SERVES EMERGENCY LIGHTING EQUIPMENT.

J. PROVIDE A DEDICATED NEUTRAL AND EQUIPMENT GROUNDING CONDUCTOR FOR EACH BRANCH CIRCUIT.

K. MINIMUM BRANCH CONDUCTOR SIZE SHALL BE #12 AWG AND MINIMUM CONDUIT SIZE SHALL BE ½ INCH. PROVIDE A GREEN INSULATED EQUIPMENT GROUNDING CONDUCTOR IN WITH ALL CIRCUITS, SIZED IN ACCORDANCE WITH THE NEC; #12 AWG MINIMUM

L. CONCEAL ALL CONDUITS AND CONDUCTORS IN WALLS, (BLOCK WALLS INCLUDED) AND ABOVE CEILINGS. PROVIDE A PULL STRING IN ALL EMPTY CONDUITS.

M. LOCATION OF DISCONNECT SWITCHES ARE APPROXIMATE. ELECTRICAL CONTRACTOR SHALL COORDINATE EXACT LOCATION IN FIELD. LOCATION SHALL BE FREE OF MECHANICAL PIPING AND DUCT WORK AND MEET ALL NEC REQUIREMENTS.

N. ALL RECEPTACLE COVER PLATES SHALL BE STAINLESS STEEL TO MATCH RECEPTACLE CONFIGURATION (PASS AND SEYMOUR WP8 OR WP26) UNLESS SPECIFIED OTHERWISE.

O. PROVIDE WP FLUSH MOUNTED TRAFFIC RATED PULLBOXES AS NEEDED TO MAKE CONNECTIONS TO CONDUIT STUBBED OUT OF BUILDING UNDER BUILDING CONTRACT.

P. ALL EMPTY CONDUITS SHALL BE PROVIDED WITH PULL STRING THROUGHOUT AND EXTENDING 12" BEYOND EACH END OF THE CONDUIT.

NOTE: TYPICAL MOUNTING HEIGHTS UNLESS OTHERWISE NOTED.

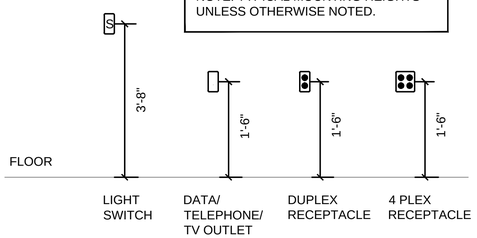

A1 TYPICAL DEVICE MOUNTING HEIGHTS

NOT TO SCALE

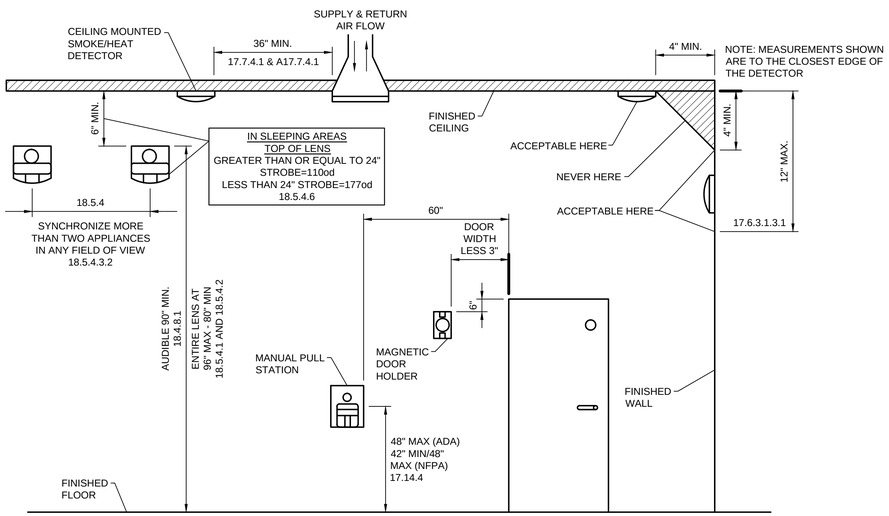

THIS STANDARD IS PROVIDED FOR REFERENCE ONLY. PLEASE REFER TO NFPA 72 FOR PROJECT SPECIFIC REQUIREMENTS.

A7 FIRE ALARM ELEVATION DETAIL

NOT TO SCALE

NEW/EXISTING LEGEND
NEW
EXISTING

F:\Projects\015-0534\40-Design\AutoCAD\100 Hastings Auditorium\Sheets\MECH\Electrical\E_NLEG1A_50534.dwg Andrew Ohlman

REVISIONS:

DESIGN ENGINEER: KSC
PROJECT ENGINEER: KSC
DRAWN BY: TLH
ISSUED: 10/05/2015
OA PROJECT #: 015-0534

PROFESSIONAL ELECTRICAL ENGINEER KELLY S. CARMAN E-10867 STATE OF NEBRASKA
11/11/2015 01:43:32 AM

PROJECT CONSULTANTS

STRUCTURAL ENGINEER
Voss & Associates, Inc.
201 North 7th Street, Suite 300
Lincoln, NE 68508
402-476-5055

MECHANICAL/ELECTRICAL ENGINEERS
Olsson Associates
601 P Street, Suite 200
Lincoln, NE 68508
402-474-6311

City of Hastings

Hastings City Auditorium Interior Renovation

SINCLAIR hille architects
700 Q St. Lincoln, NE 68508 T: 402 476 7331 F: 402 476 8341

Electrical Legend and Abbrevations

SHA PROJECT NO. 15011

E001

© Copyright SINCLAIR HILLE ARCHITECTS

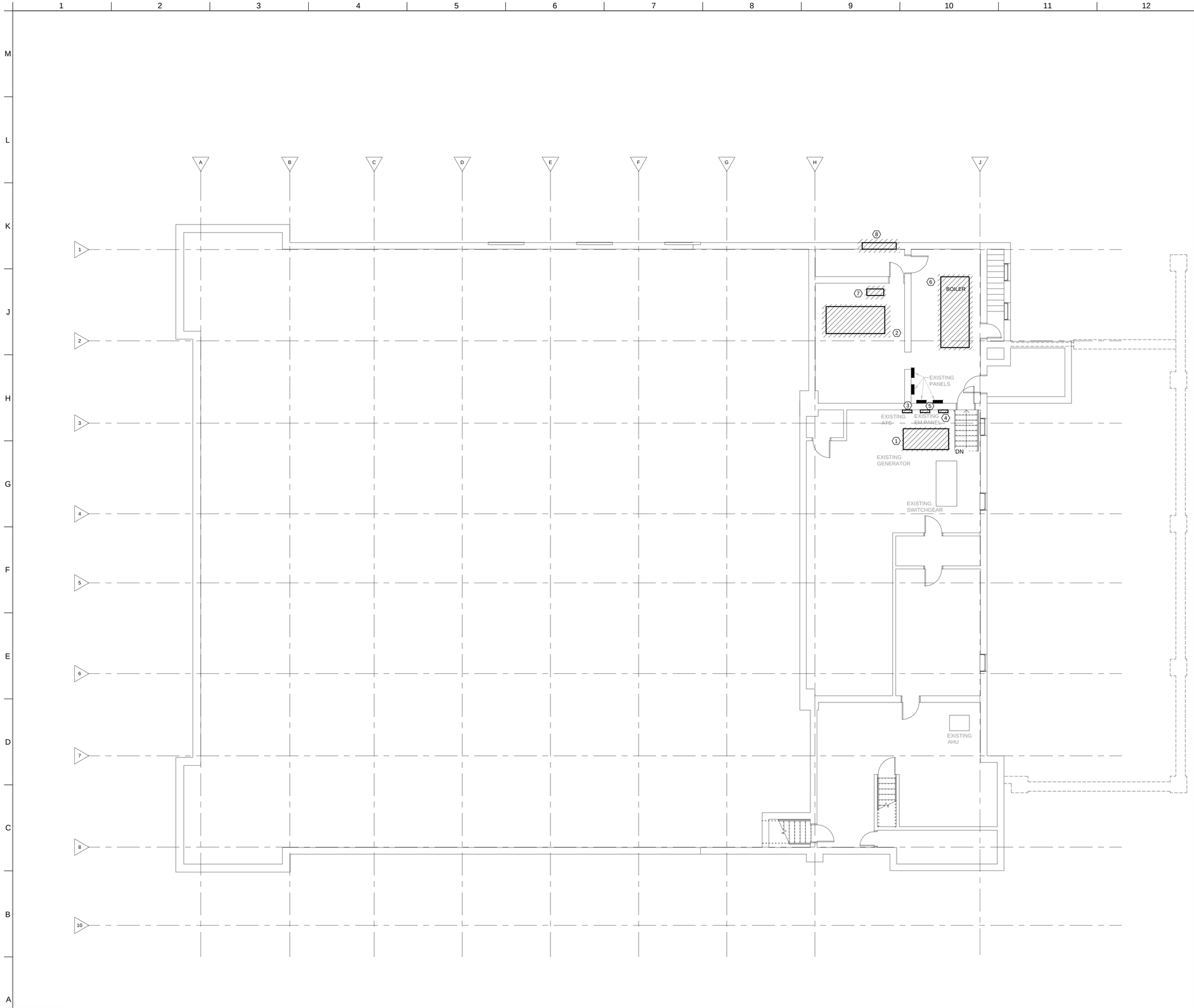

SHEET NOTES:

1. REMOVE EXISTING GENERATOR AND ALL ASSOCIATED CONNECTIONS INCLUDING WIRES, CONDUIT, ETC.
2. REMOVE ELECTRICAL CONNECTION, CONDUCTORS, CONDUITS, ETC. FOR THE EXISTING BLOWER.
3. REMOVE EXISTING ATS AND ALL ASSOCIATED CONNECTIONS INCLUDING WIRES, CONDUIT, ETC.
4. REMOVE EXISTING TELEPHONE BOARD, PHONEBLOCKS, AND PHONE ENTRANCE CABLE. EXISTING BRANCH PHONE LINES SHALL REMAIN FOR TERMINATION ON THE NEW PHONEBOARD.
5. REMOVE EXISTING EMERGENCY PANEL BOARD AND ALL ASSOCIATES CONNECTIONS INCLUDING WIRES, CONDUIT, CIRCUIT BREAKERS, ETC.
6. REMOVE ELECTRICAL CONNECTION, CONDUCTORS, CONDUITS, ETC. FOR THE EXISTING BOILER.
7. REMOVE ELECTRICAL CONNECTION, CONDUCTORS, CONDUITS, ETC. FOR THE EXISTING MOTOR.
8. REMOVE ELECTRICAL CONNECTION, CONDUCTORS, CONDUITS, ETC. FOR THE EXISTING OUTDOOR AIR BURNER.

A1 LOWER LEVEL POWER AND SYSTEMS DEMO PLAN

SCALE: 1/8" = 1'-0"

REVISIONS:

DESIGN ENGINEER: KSC
PROJECT ENGINEER: KSC
DRAWN BY: TLH
ISSUED: 10/05/2015
OA PROJECT #: 015-0534

PROFESSIONAL ELECTRICAL ENGINEER KELLY S. CARMAN E-10867 STATE OF NEBRASKA
11/11/2015 01:43:35 AM

PROJECT CONSULTANTS

STRUCTURAL ENGINEER
Voss & Associates, Inc.
201 North 7th Street, Suite 300
Lincoln, NE 68508
402-476-5055

MECHANICAL/ELECTRICAL ENGINEERS
Olsson Associates
601 P Street, Suite 200
Lincoln, NE 68508
402-474-6311

City of Hastings

Hastings City Auditorium Interior Renovation

SINCLAIR hille architects
700 Q St. Lincoln, NE 68508 T: 402 476 7331 F: 402 476 8341

Lower Level Power and Systems Demo Plan

SHA PROJECT NO. 15011

ED100

© Copyright SINCLAIR HILLE ARCHITECTS

F:\Projects\015-0534\40-Design\AutoCAD\100 Hastings Auditorium\Sheets\MECH\Electrical\E_DELC1A_50534.dwg Andrew Ohlman

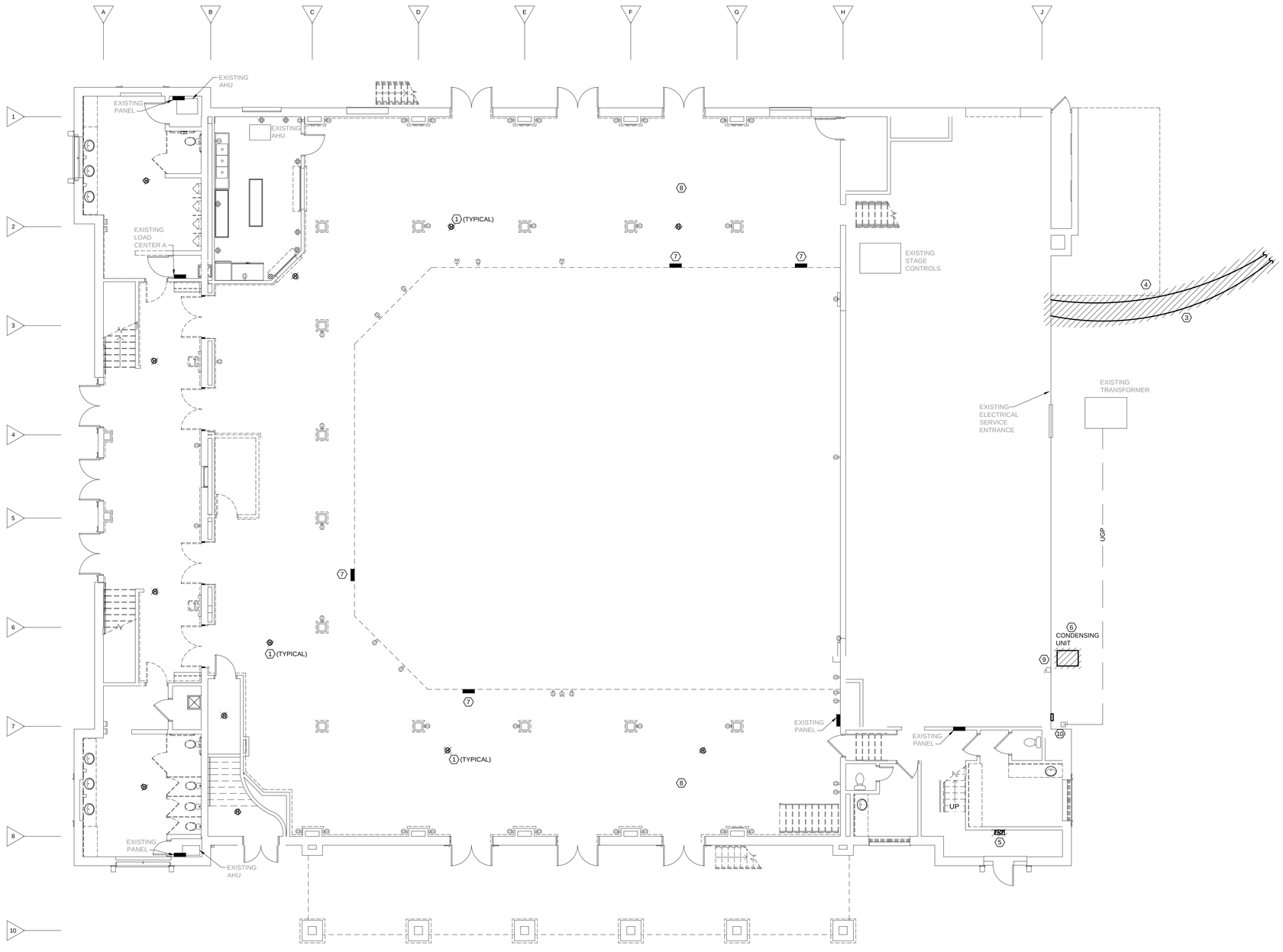

A1 FIRST LEVEL POWER AND SYSTEMS DEMO PLAN

SCALE: 1/8" = 1'-0"

SHEET NOTES:

1. REMOVE EXISTING HEAT DETECTORS AND ANY ASSOCIATED CONNECTIONS.
2. REMOVE EXISTING RECEPTACLE.
3. COORDINATE REMOVAL OF OVERHEAD TELEPHONE LINE WITH SERVICE PROVIDER.
4. COORDINATE REMOVAL OF OVERHEAD CABLE LINE WITH SERVICE PROVIDER.
5. REMOVE FIRE ALARM CONTROL PANEL AND ALL ASSOCIATED WIRING, SUPPORTS, DEVICES, ETC.
6. DISCONNECT EXISTING CONDENSING UNIT FROM EXISTING CIRCUIT. REMOVE DISCONNECT AND MAINTAIN FOR REUSE. PREP WIRES AND CONDUITS FOR EXTENSION TO RELOCATED CONDENSING UNIT.
7. EXISTING SMALL LOAD CENTER MOUNTED ON SOFFIT ABOVE.
8. THE INSTALLATION OF THE NEW STAIRS WILL AFFECT THE EXISTING BRANCH CIRCUITING. REMOVE AND RECONNECT EXISTING BRANCH CIRCUITING.
9. RELOCATED EXISTING ELECTRICAL CONNECTION TO NEW LOCATION. SEE SHEET E101.
10. REMOVE AND RELOCATED EXISTING DISCONNECT SWITCH. SEE SHEET E101 FOR NEW LOCATION. DISCONNECT IS USED FOR TEMPORARY EXTERIOR POWER CONNECTIONS.

REVISIONS:

DESIGN ENGINEER: KSC
PROJECT ENGINEER KSC
DRAWN BY: TLH
ISSUED: 10/05/2015
OA PROJECT #: 015-0534

PROFESSIONAL ELECTRICAL ENGINEER KELLY S. CARMAN E-10867 STATE OF NEBRASKA
11/11/2015 01:43:35 AM

PROJECT CONSULTANTS

STRUCTURAL ENGINEER
Voss & Associates, Inc
201 North 7th Street, Suite 200
Lincoln, NE 68508
402-476-5055

MECHANICAL/ELECTRICAL ENGINEERS
Olsson Associates
601 P Street, Suite 200
Lincoln, NE 68508
402-474-6311

City of Hastings

Hastings City Auditorium Interior Renovation

SINCLAIR hille architects
700 Q St. Lincoln, NE 68508 T: 402 476 7331 F: 402 476 8341

First Level Power and Systems Demo Plan

SHA PROJECT NO. 15011

ED101

© Copyright SINCLAIR HILLE ARCHITECTS

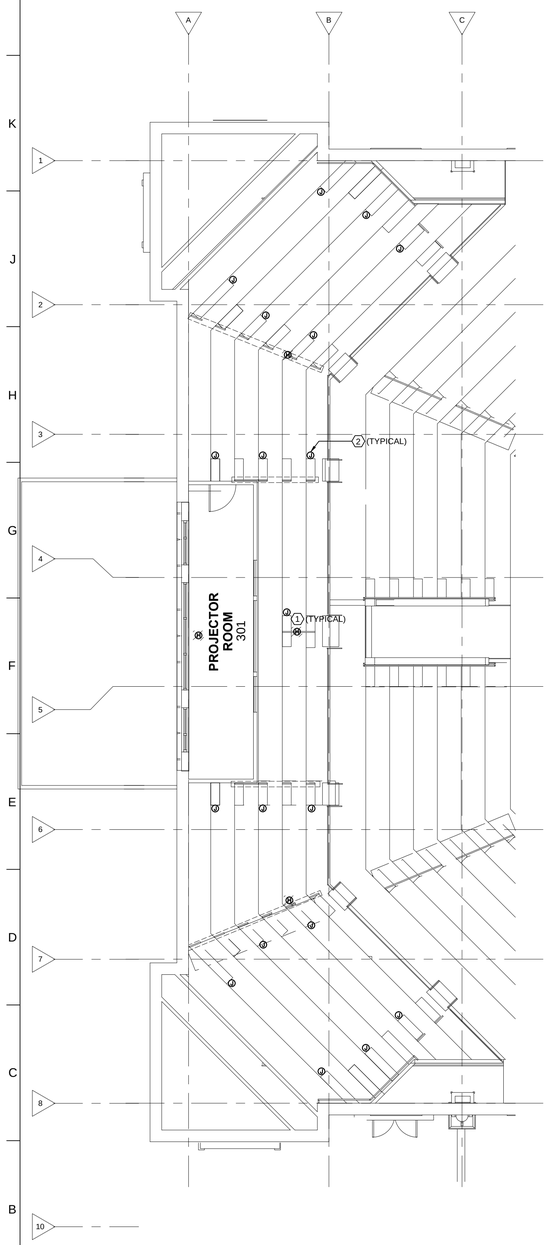

A1 UPPER BOWL POWER AND SYSTEMS DEMO PLAN

SCALE: 1/8" = 1'-0"

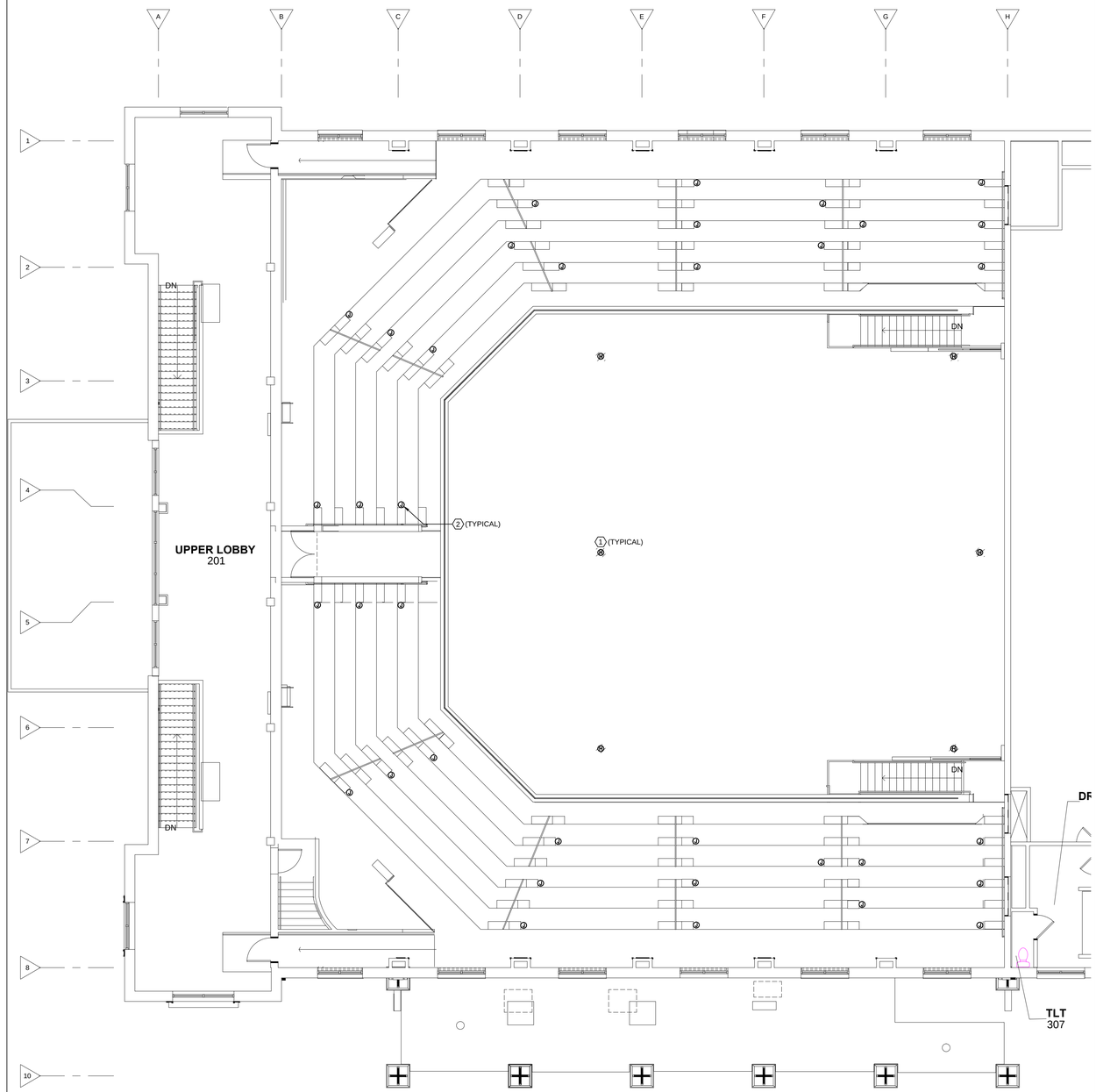

A5 SECOND LEVEL POWER AND SYSTEMS DEMO PLAN

SCALE: 1/8" = 1'-0"

SHEET NOTES:

1. REMOVE EXISTING HEAT DETECTORS AND ALL ASSOCIATED CONNECTIONS.
2. EXISTING STEP LIGHTING IS LOCATED ON THE ISLE SIDE OF THE EXISTING SEATS. THE ISLES ARE BEING WIDENED AND EXISTING SEATS WILL BE REMOVED. THE STEP LIGHTS ON THE SIDE OF THE SEATS CURRENTLY FEED THROUGH THE RISERS FROM BELOW. CONTRACTOR SHALL RELOCATE THE WIRING TO THE RELOCATED SEAT WITH STEP LIGHTING. ADDITIONAL WIRING WILL BE REQUIRED TO THE NEW LOCATIONS. CONTRACTOR SHALL VERIFY THE LOCATIONS PRIOR TO COMMENCING WORK.

DESIGN ENGINEER: KSC
PROJECT ENGINEER: KSC
DRAWN BY: TLH
ISSUED: 10/05/2015
QA PROJECT #: 015-0534

REVISIONS:

PROFESSIONAL ELECTRICAL ENGINEER KELLY S. CARMAN E-10867 STATE OF NEBRASKA
11/11/2015 01:14:07 AM

PROJECT CONSULTANTS

STRUCTURAL ENGINEER
Voss & Associates, Inc
201 North 7th Street, Suite 300
Lincoln, NE 68508
402-476-5055

MECHANICAL/ELECTRICAL ENGINEERS
Olsson Associates
601 P Street, Suite 200
Lincoln, NE 68508
402-474-6311

City of Hastings

Hastings City Auditorium Interior Renovation

SINCLAIR hille architects
700 Q St. Lincoln, NE 68508 T: 402 476 7331 F: 402 476 8341

Second Level and Upper Bowl Power and Systems Demo Plan

SHA PROJECT NO. 15011

ED102

© Copyright SINCLAIR HILLE ARCHITECTS

F:\Projects\015-0534\40-Design\AutoCAD\100 Hastings Auditorium\Sheets\MECH\ElectricalE_DLTG1A_50534.dwg Andrew Ohlman

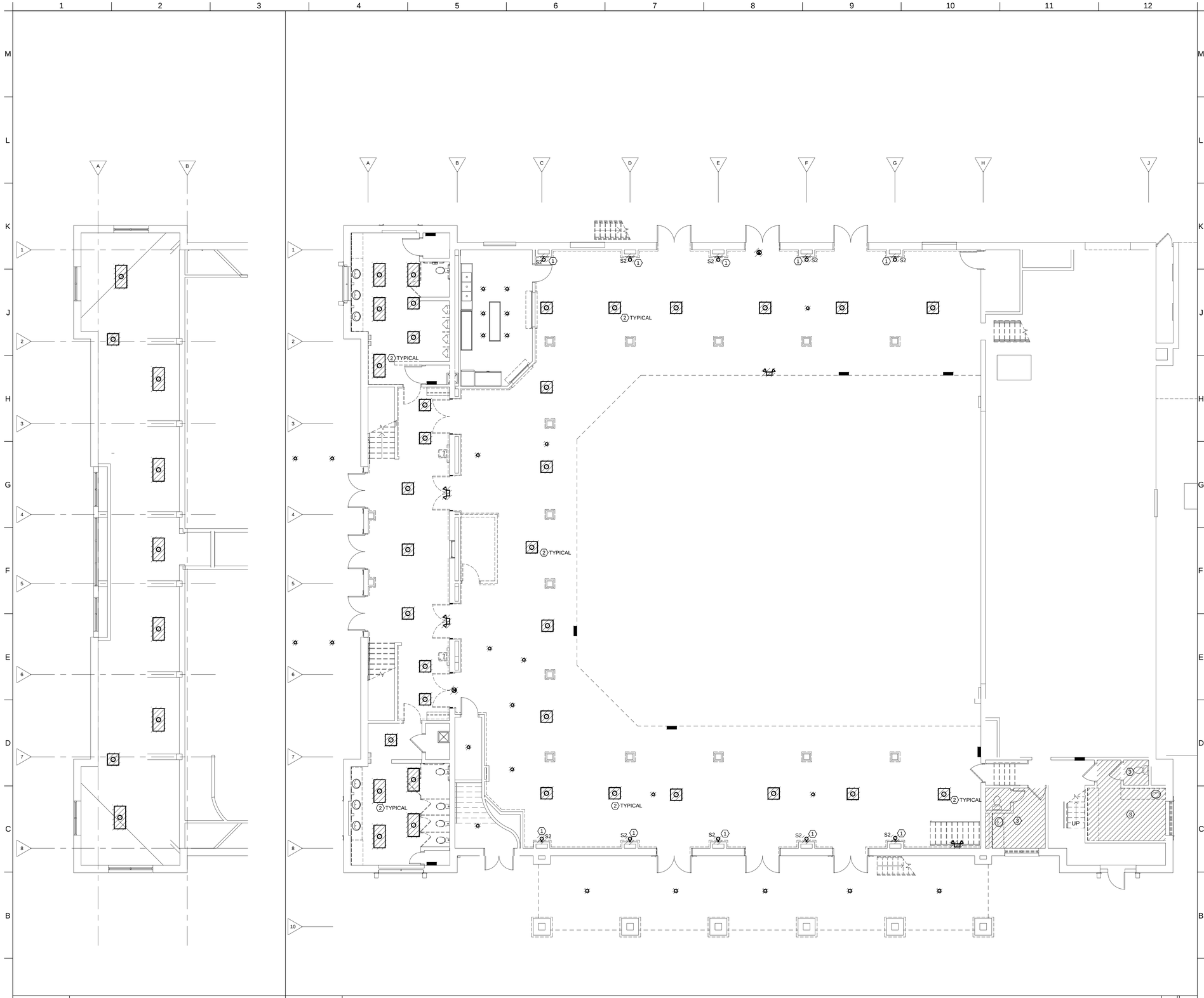

A1 UPPER LOBBY LIGHTING DEMO PLAN

SCALE: 1/8" = 1'-0"

A5 FIRST LEVEL LIGHTING DEMO PLAN

SCALE: 1/8" = 1'-0"

GENERAL NOTES:

A. REMOVE ALL EXISTING EMERGENCY WALL PACKS AND EXIT SIGNS WHETHER OR NOT THEY ARE SHOWN ON THE DRAWINGS.

SHEET NOTES:

1. REMOVE EXISTING WALL MOUNTED LIGHT FIXTURE. MAINTAIN FOR REUSE.
2. REMOVE EXISTING LIGHT FIXTURE.
3. DEMO THE EXISTING LIGHTING IN THIS AREA. THE EXISTING LIGHTING CIRCUITS SHALL BE RECONNECTED TO THE NEW LIGHTING TO BE PROVIDED IN THIS AREA.

REVISIONS:

DESIGN ENGINEER: KSC
PROJECT ENGINEER: KSC
DRAWN BY: TLH
ISSUED: 10/05/2015
OA PROJECT #: 015-0534

PROFESSIONAL ELECTRICAL ENGINEER KELLY S. CARMAN E-10867 STATE OF NEBRASKA
11/11/2015 01:41 AM

PROJECT CONSULTANTS

STRUCTURAL ENGINEER
Voss & Associates, Inc
201 North 7th Street, Suite 200
Lincoln, NE 68508
402-476-5055

MECHANICAL/ELECTRICAL ENGINEERS
Olsson Associates
601 P Street, Suite 200
Lincoln, NE 68508
402-474-6311

City of Hastings

Hastings City Auditorium Interior Renovation

SINCLAIR hille architects
700 Q St. Lincoln, NE 68508 T: 402 476 7331 F: 402 476 8341

First Level and Upper Lobby Lighting Demo Plan

SHA PROJECT NO. 15011

ED201

© Copyright SINCLAIR HILLE ARCHITECTS

F:\Projects\015-0534\40-Design\AutoCAD\100 Hastings Auditorium\Sheets\MECH\Electrical\E_DLTG3A_50534.dwg Andrew Ohlman

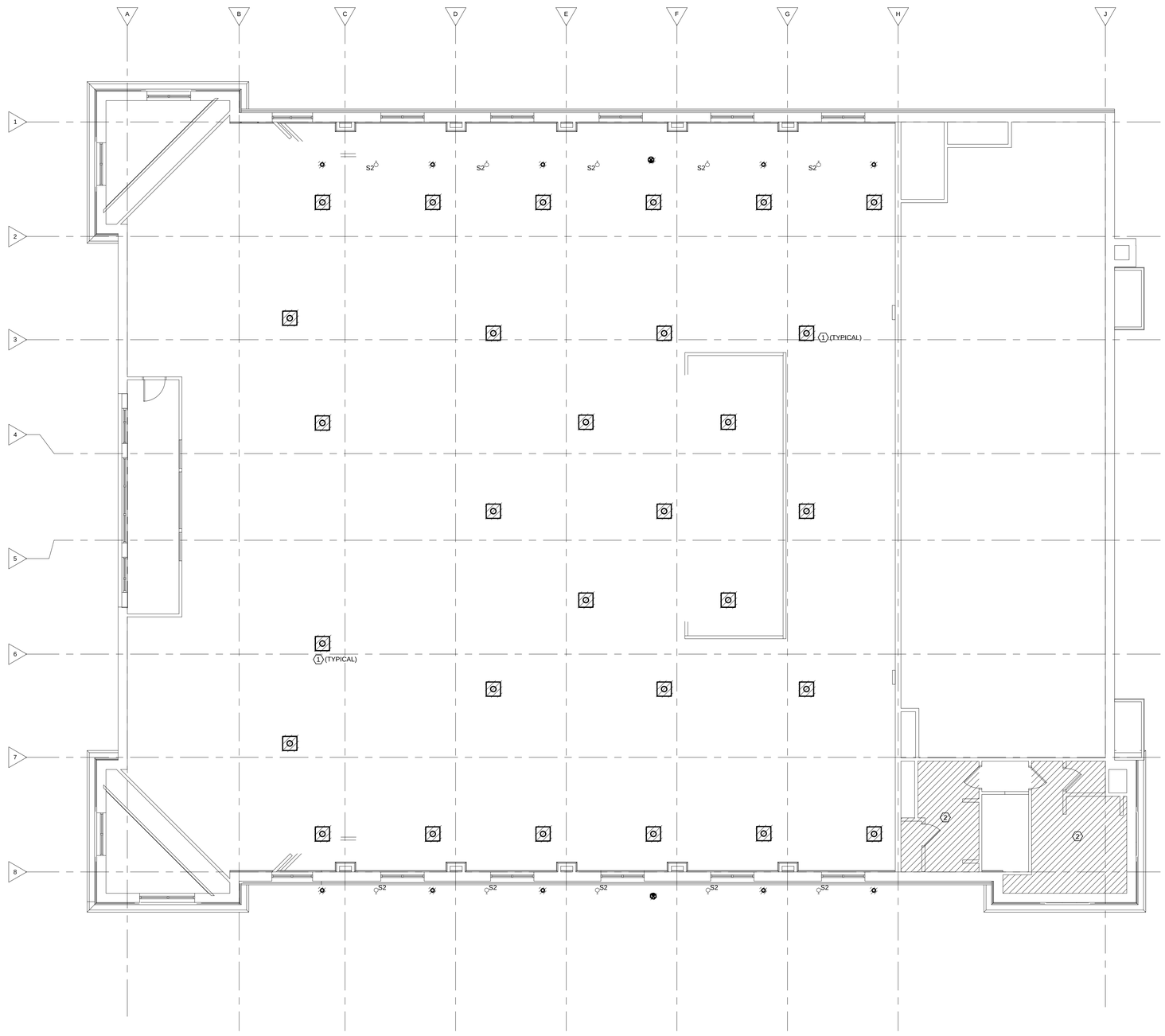

GENERAL NOTES:

A. REMOVE ALL EXISTING EMERGENCY WALL PACKS AND EXIT SIGNS WHETHER OR NOT THEY ARE SHOWN ON THE DRAWINGS.

SHEET NOTES:

1. REMOVE EXISTING LIGHT FIXTURE AND ASSOCIATED CONDUCTORS, CONDUIT, ETC.
2. DEMO THE EXISTING LIGHTING IN THIS AREA. THE EXISTING LIGHTING CIRCUITS SHALL BE RECONNECTED TO THE NEW LIGHTING TO BE PROVIDED IN THIS AREA.

A1 AUDITORIUM LIGHTING DEMO PLAN

SCALE: 1/8" = 1'-0"

REVISIONS:

DESIGN ENGINEER: KSC
PROJECT ENGINEER: KSC
DRAWN BY: TLH
ISSUED: 10/05/2015
OA PROJECT #: 015-0534

PROFESSIONAL ELECTRICAL ENGINEER KELLY S. CARMAN E-10867 STATE OF NEBRASKA
11/11/2015 01:14:03 AM

PROJECT CONSULTANTS

STRUCTURAL ENGINEER
Voss & Associates, Inc.
201 North 7th Street, Suite 300
Lincoln, NE 68508
402-476-5055

MECHANICAL/ELECTRICAL ENGINEERS
Olsson Associates
601 P Street, Suite 200
Lincoln, NE 68508
402-474-6311

City of Hastings

Hastings City Auditorium Interior Renovation

SINCLAIR hille architects
700 Q St. Lincoln, NE 68508 T: 402 476 7331 F: 402 476 8341

Auditorium Lighting Demo Plan

SHA PROJECT NO. 15011

ED202

© Copyright SINCLAIR HILLE ARCHITECTS

SHEET NOTES:

1. PROVIDE 4x8 FIRE RESISTANT PLYWOOD BACKBOARD. PROVIDE NEW 110 BLOCKS, LIGHTNING PROTECTION AND CROSS CONNECTS AND TERMINATE NEW TELEPHONE ENTRANCE CABLE. RECONNECT EXISTING PHONE CABLES. PROVIDE NEW CATV ENTRANCE, SPLITTER, AND RECONNECT EXISTING CATV CABLE. PROVIDE GROUND BAR AND BOND TO MAIN ELECTRICAL SERVICE VIA 1/0 BARE CONDUCTOR BOND TO LIGHTNING PROTECTION.

2. REFER TO F1/E402 FOR FIRE ALARM DEVICE WIRING DIAGRAM.

A1 LOWER LEVEL POWER AND SYSTEMS PLAN

SCALE: 1/8" = 1'-0"

REVISIONS:

DESIGN ENGINEER: KSC
PROJECT ENGINEER: KSC
DRAWN BY: TLH
ISSUED: 10/05/2015
OA PROJECT #: 015-0534

PROFESSIONAL ELECTRICAL ENGINEER KELLY S. CARMAN E-10867 STATE OF NEBRASKA
11/11/2015 01:14:30 AM

PROJECT CONSULTANTS

STRUCTURAL ENGINEER
Voss & Associates, Inc.
201 North 7th Street, Suite 300
Lincoln, NE 68508
402-476-5055

MECHANICAL/ELECTRICAL ENGINEERS
Olsson Associates
601 P Street, Suite 200
Lincoln, NE 68508
402-474-6311

City of Hastings

Hastings City Auditorium Interior Renovation

SINCLAIR hille architects
700 Q St. Lincoln, NE 68508 T: 402 476 7331 F: 402 476 8341

Lower Level Power and Systems Plan

SHA PROJECT NO. 15011

E100

© Copyright SINCLAIR HILLE ARCHITECTS

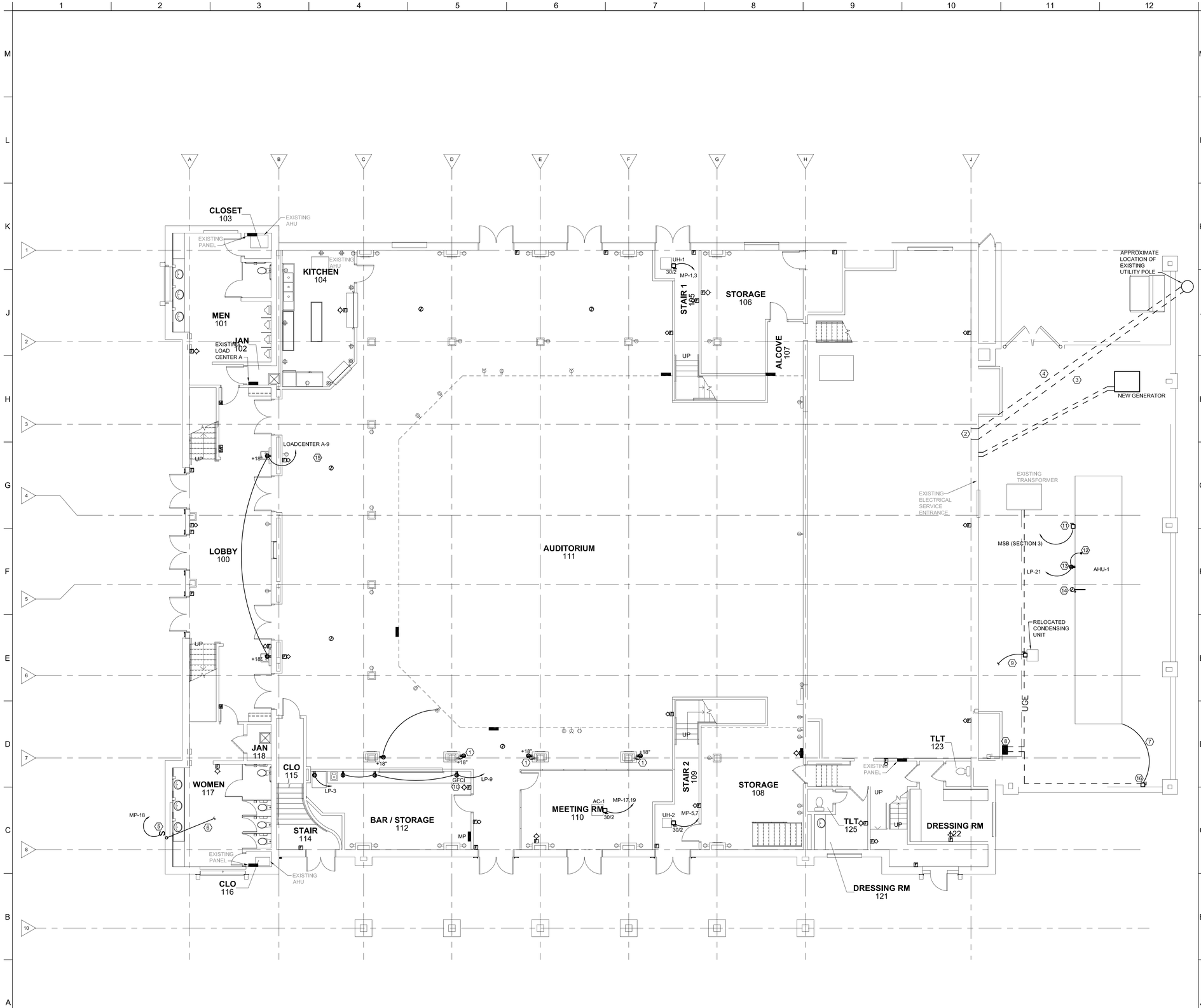

SHEET NOTES:

1. EXTEND BRANCH CIRCUIT THAT ORIGINALLY SERVED THE RECEPTACLES AT THE TOP OF THE COLUMNS, PRIOR TO THEIR REMOVAL.
2. NEW BUILDING PENETRATION. DO NOT REUSE EXISTING PENETRATION.
3. PROVIDE 2" UNDERGROUND CONDUIT FROM POLE TO BUILDING ENTRANCE. COORDINATE RELOCATION OF OVERHEAD PHONE SERVICE TO UNDERGROUND PHONE SERVICE WITH WINDSTREAM FOR NEW TELEPHONE ENTRANCE.
4. PROVIDE 2" UNDERGROUND CONDUIT FROM POLE TO BUILDING ENTRANCE FOR NEW CABLE TV SERVICE. COORDINATE EXACT ROUTE WITH CHARTER CABLE SERVICE.
5. DISCONNECT SWITCH FOR NEW SIGNAGE SHALL COMPLY WITH NEC 600.3 AND BE MOUNTED IN AN INCONSPICUOUS LOCATION. COORDINATE EXACT LOCATION OF SIGNAGE WITH SIGNAGE CONTRACTOR
6. PROVIDE (1) 1" CONDUIT FROM SIGNAGE LOCATION TO THE CONTROL OFFICE LOCATED ON THE ATTIC LEVEL, ABOVE THE DRESSING ROOMS FOR FIBER OPTIC CABLE PROVIDE BY OTHERS. ALL BENDS SHALL BE NO LESS THAN A 6" SWEEP.
7. PROVIDE #4 UFER GROUND FROM EXISTING DISCONNECT SWITCH TO NEW REBAR IN NEW AHU CONCRETE PAD. PROVIDE EXPANSION FITTINGS.
8. PROVIDE NEMA 3R JUNCTION BOX WITH ILSCO LUGS TO EXTEND THE FEEDER FROM THE UTILITY PAD MOUNTED TRANSFORMER TO THE NEW 200A DISCONNECT SWITCH LOCATION.
9. EXTEND EXISTING CONDENSING UNIT FEEDER FROM EXISTING LOCATION TO NEW LOCATION. PROVIDE A FREE STANDING UNISTRUT FRAME WITH CONCRETE BASE FOR CONDENSING UNIT DISCONNECT. MAKE FINAL CONNECTIONS TO RELOCATED UNIT. FIELD VERIFY EXACT WIRE AND CONDUIT SIZE.
10. DAISY CHAIN COUNTERTOP RECEPTACLES DOWNSTREAM OF GFCI RECEPTACLE IN SUCH A WAY THAT ALL THREE RECEPTACLES ARE PROTECTED BY THE GFCI RECEPTACLE.
11. DISCONNECT IS FURNISHED WITH AHU-1
12. CONNECT TO LIGHTING WITHIN THE UNIT.
13. REFER TO DETAIL A6/E402 FOR RECEPTACLE INFORMATION.
14. DUCT SMOKE DETECTOR SHALL BE FURNISHED BY ELECTRICAL CONTRACTOR, INSTALLED BY MECHANICAL CONTRACTOR, AND WIRED BY ELECTRICAL CONTRACTOR.
15. PROVIDE NEW CIRCUIT BREAKER IN LOAD CENTER A FOR CIRCUIT 9.
16. NEW LOCATION FOR EXISTING 200A DISCONNECT SWITCH, (FOR TEMPORARY EVENTS EXTERIOR POWER). PROVIDE CONDUIT AND WIRE FROM NEW JUNCTION BOX. MATCH EXISTING CONDUIT AND WIRE SIZE. PROVIDE NEW SCHEDULE 40 PVC CONDUIT SLEEVE THROUGH CONCRETE BLOCK TO THE SOUTH AT FINISHED GRADE FOR FUTURE WIRE CONNECTIONS TO THE SECONDARY SIDE OF THE DISCONNECT SWITCH. PROVIDE EXPANSION FITTINGS.

NEW/EXISTING LEGEND
NEW
EXISTING

A1 FIRST LEVEL POWER AND SYSTEMS PLAN
SCALE: 1/8" = 1'-0"

REVISIONS:

DESIGN ENGINEER: KSC
PROJECT ENGINEER: KSC
DRAWN BY: TLH
ISSUED: 10/05/2015
OA PROJECT #: 015-0534

PROFESSIONAL ELECTRICAL ENGINEER KELLY S. CARMAN E-10867 STATE OF NEBRASKA
11/13/2015 9:00:04 AM

PROJECT CONSULTANTS

STRUCTURAL ENGINEER
Voss & Associates, Inc
201 North 7th Street, Suite 201
Lincoln, NE 68508
402-476-6685

MECHANICAL/ELECTRICAL ENGINEERS
Bason Associates
6101 Rockwood Drive
Lincoln, NE 68505
402-416-0311

City of Hastings

Hastings City Auditorium Interior Renovation

SINCLAIR hille architects
700 Q St. Lincoln, NE 68508 T: 402 476 7331 F: 402 476 8341

First Level Power and Systems Plan

SHA PROJECT NO. 15011

E101

© Copyright SINCLAIR HILLE ARCHITECTS

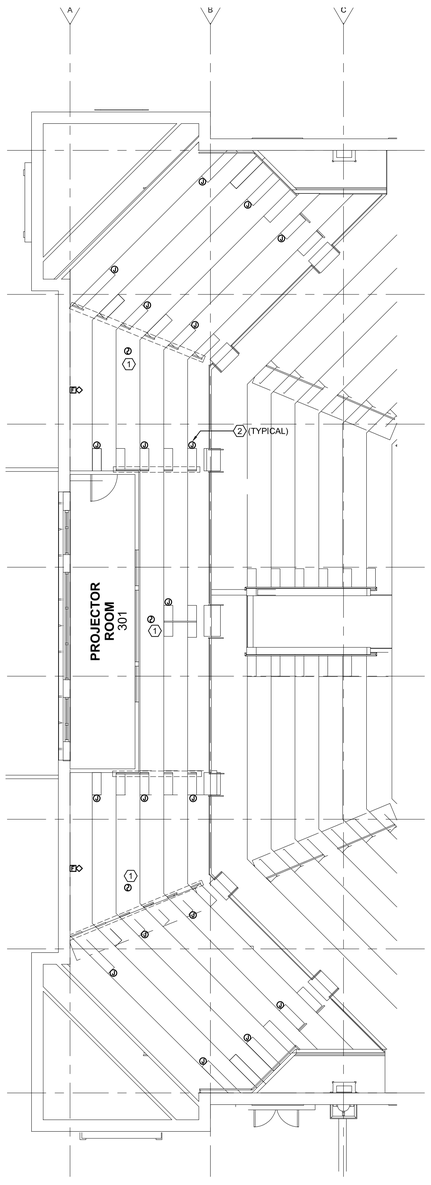

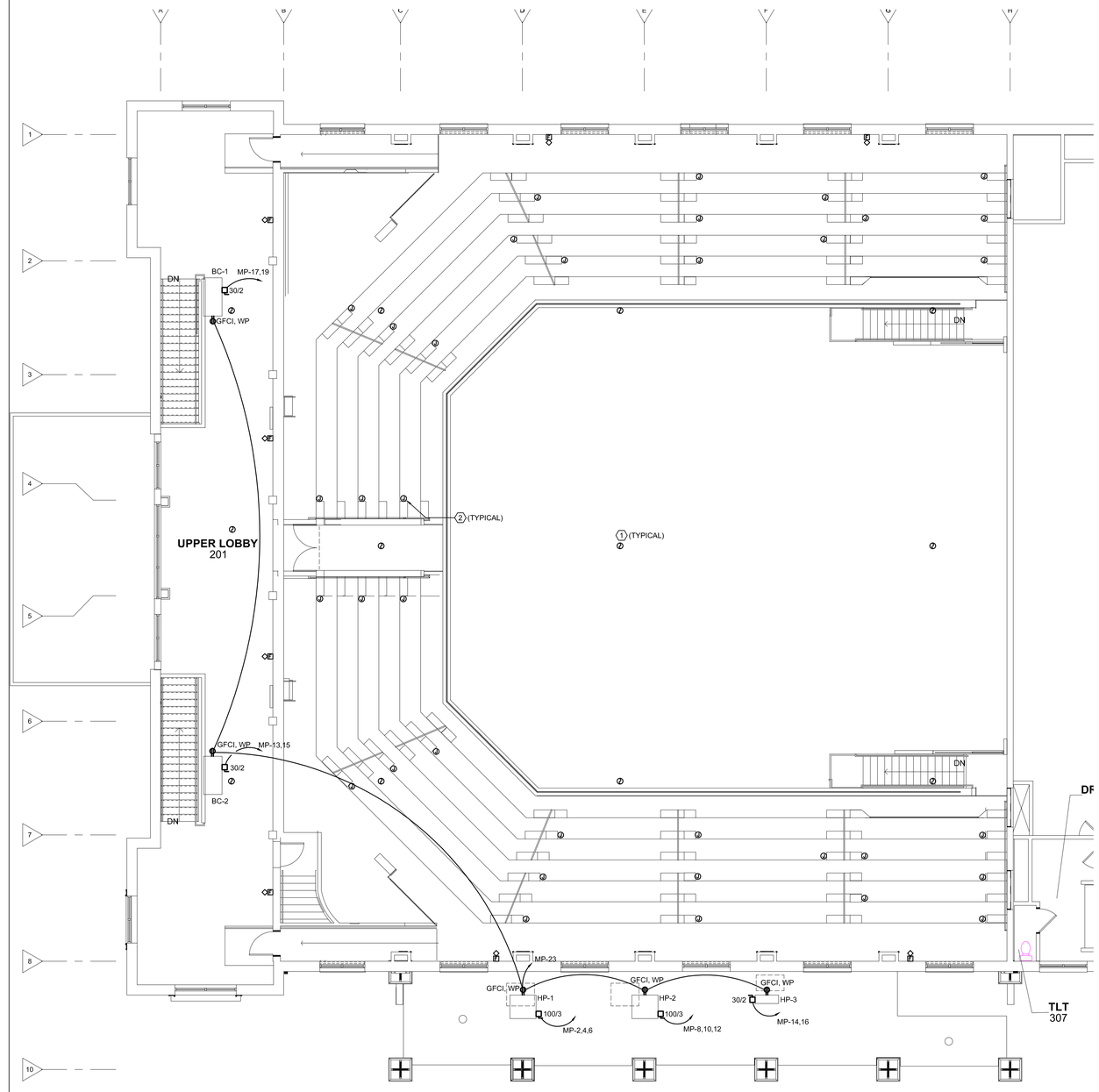

SHEET NOTES:

1. SMOKE DETECTORS SHALL BE LOCATED WITHIN DROP-IN CEILING TILES IN AUDITORIUM SPACE.
2. EXISTING STEP LIGHTING IS LOCATED ON THE ISLE SIDE OF THE EXISTING SEATS. THE ISLES ARE BEING WIDENED AND EXISTING SEATS WILL BE REMOVED. THE STEP LIGHTS ON THE SIDE OF THE SEATS CURRENTLY FEED THROUGH THE RISERS FROM BELOW. CONTRACTOR SHALL RELOCATE THE WIRING TO THE RELOCATED SEAT WITH STEP LIGHTING. ADDITIONAL WIRING WILL BE REQUIRED TO THE NEW LOCATIONS. CONTRACTOR SHALL VERIFY THE LOCATIONS PRIOR TO COMMENCING WORK. NEW STEP LIGHTS IN THE SIDE OF THE CHAIRS WILL BE FURNISHED BY THE CITY AND INSTALLED BY THE CONTRACTOR.

A1	UPPER BOWL POWER AND SYSTEMS PLAN
SCALE: 1/8" = 1'-0"	
A5	SECOND LEVEL POWER AND SYSTEMS PLAN
SCALE: 1/8" = 1'-0"	

REVISIONS:

DESIGN ENGINEER: KSC
PROJECT ENGINEER: KSC
DRAWN BY: TLH
ISSUED: 10/05/2015
OA PROJECT #: 015-0534

PROFESSIONAL ELECTRICAL ENGINEER KELLY S. CARMAN E-10867 STATE OF NEBRASKA
11/12/2015 10:22:10 AM

PROJECT CONSULTANTS

STRUCTURAL ENGINEER
Voss & Associates, Inc
201 North 7th Street, Suite 201
Lincoln, NE 68508
402-476-6685

MECHANICAL/ELECTRICAL ENGINEERS
Bason Associates
6100 Prospect Ridge, Suite 200
Lincoln, NE 68508
402-416-0311

City of Hastings

Hastings City Auditorium Interior Renovation

SINCLAIR | hille architects
700 Q St. Lincoln, NE 68508 T: 402 476 7331 F: 402 476 8341

Second Level and Upper Bowl Power and Systems Plans

SHA PROJECT NO. 15011

E102

© Copyright SINCLAIR HILLE ARCHITECTS

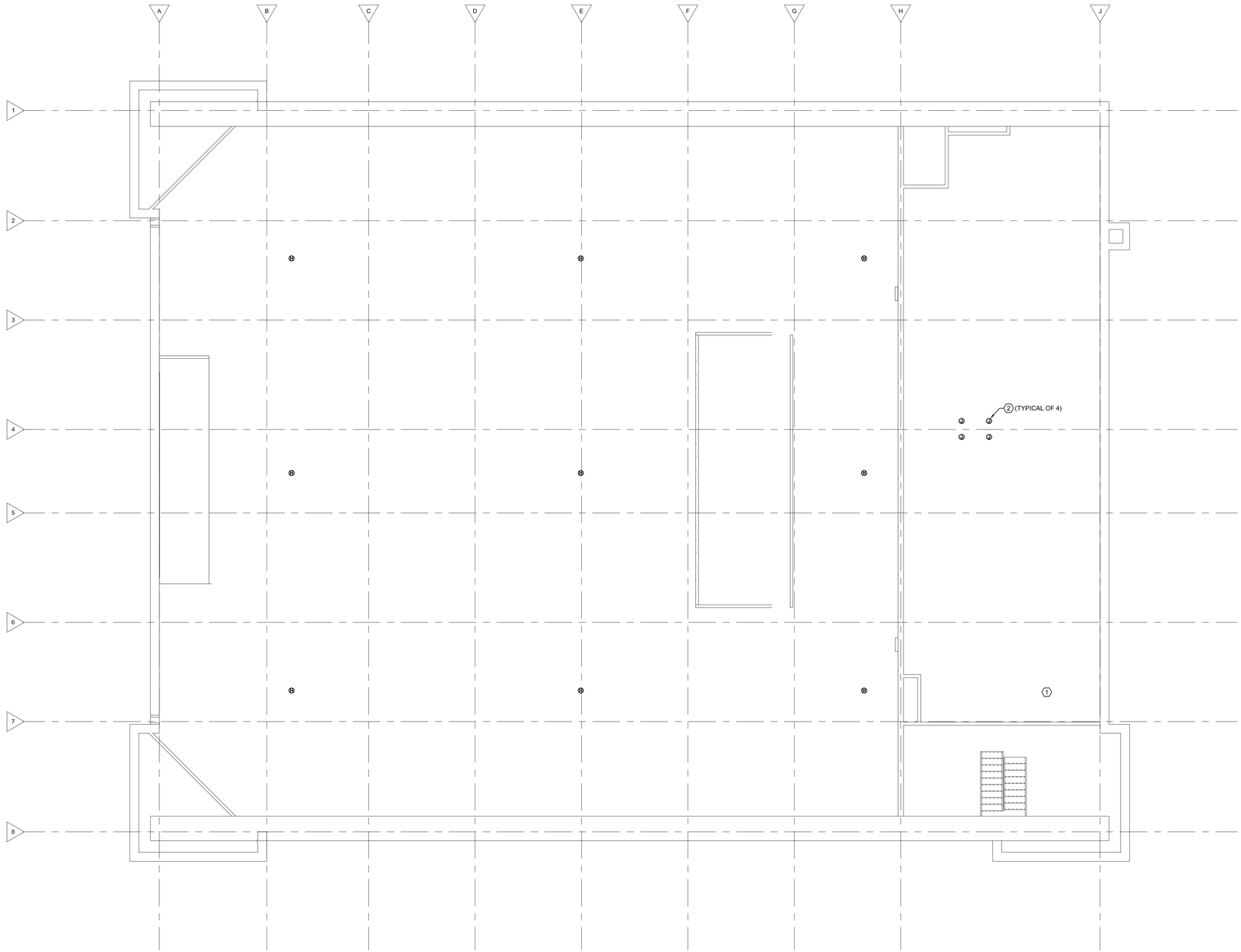

SHEET NOTES:

1. RECONNECT CABLE TV SERVICE IN MANAGERS SPACE TO NEW CABLE SERVICE.
2. PROVIDE 24V CONNECTION FROM FACP TO ACTIVATE THE ACTUATORS FOR SMOKE DAMPER EXHAUST. REFER TO ARCHITECTURAL SHEETS FOR EXACT LOCATIONS.

A1 ATTIC POWER AND SYSTEMS PLAN

SCALE: 1/8" = 1'-0"

DESIGN ENGINEER: KSC
PROJECT ENGINEER: KSC
DRAWN BY: TLH
ISSUED: 10/05/2015
OA PROJECT #: 015-0534

REVISIONS:

PROFESSIONAL ELECTRICAL ENGINEER KELLY S. CARMAN E-10867 STATE OF NEBRASKA
11/11/2015 10:11:27 AM

PROJECT CONSULTANTS

STRUCTURAL ENGINEER
Voss & Associates, Inc.
201 North 7th Street, Suite 200
Lincoln, NE 68508
402-476-6685

MECHANICAL/ELECTRICAL ENGINEERS
Bason Associates
6101 Dawes Avenue, Suite 20
Lincoln, NE 68506
402-421-0311

City of Hastings

Hastings City Auditorium Interior Renovation

SINCLAIR | hille architects
700 Q St. Lincoln, NE 68508 T: 402.476.7331 F: 402.476.8341

Attic Power and Systems Plan

SHA PROJECT NO. 15011

E103

© Copyright SINCLAIR HILLE ARCHITECTS

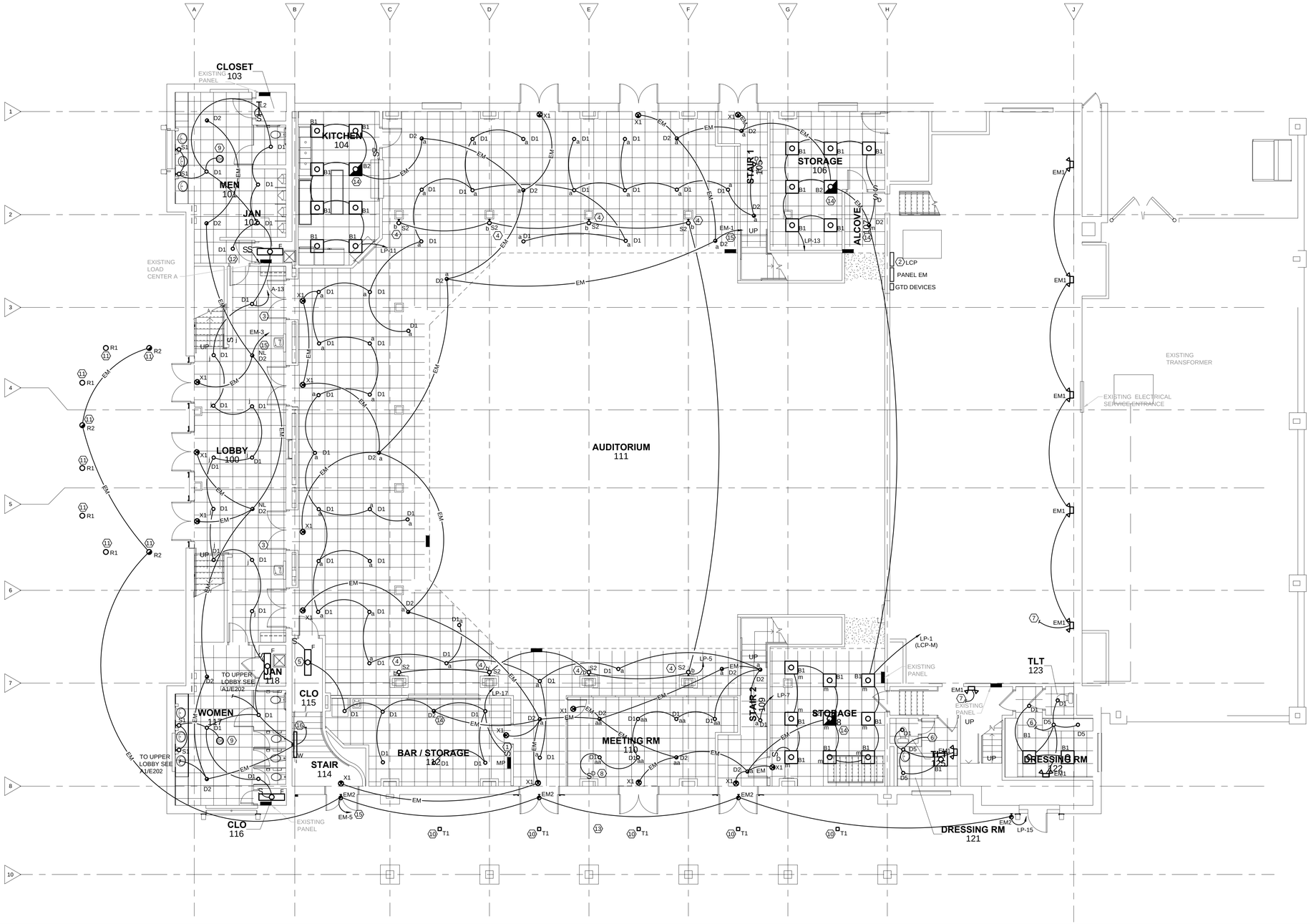

SHEET NOTES:

1. PROVIDE WATTSTOPPER DSW-301 WALL MOUNTED DUAL TECHNOLOGY OCCUPANCY SENSOR AND MANUAL SWITCH.
2. PROVIDE LIGHTING CONTROL PANEL AND GRAPHIC CONTROL STATION. REFER TO E401 FOR SWITCHING DETAIL.
3. REFER TO A1/E401 FOR LIGHTING CONTROL DETAIL FOR LOBBY AREA.
4. FIXTURE SHALL BE RELOCATED FROM EXISTING LOCATION TO THIS LOCATION.
5. LIGHT FIXTURE SHALL BE MOUNTED IN CLOSET SPACE, UNDER STAIRS.
6. CONNECT NEW FIXTURES TO THE CIRCUIT WHICH ORIGINALLY SERVED LIGHTING IN THIS AREA. REUSE EXISTING CONTROLS.
7. CIRCUIT NEW LIGHTING INTO EXISTING GENERAL LIGHTING CIRCUIT IN SAME GENERAL AREA.
8. PROVIDE WATTSTOPPER ADF-120277 0-10V WALLBOX DIMMER OR EQUAL.
9. PROVIDE WATTSTOPPER DT-355 DUAL TECHNOLOGY LINE VOLTAGE OCCUPANCY SENSOR OR EQUAL.
10. REPLACE EXISTING FIXTURE. REUSE ALL WIRE AND CONDUIT. MAINTAIN EXISTING CONTROLS.
11. NEW FIXTURE IS A RETROFIT FIXTURE AND SHALL BE INSTALLED IN EXISTING HOUSING. REUSE EXISTING WIRE AND CONDUIT. MAINTAIN EXISTING CONTROLS.
12. PROVIDE TOGGLE SWITCH IN THE JANITORS ROOM 102 TO MANUALLY CONTROL BOTH THE MEN'S AND WOMEN'S RESTROOMS 101 AND 117.
13. CONTRACTOR SHALL REPAIR BROKEN CONDUIT ON THE ROOF. REMOVE AND PULL NEW BRANCH WIRING AS NEEDED.
14. PROVIDE A GENERATOR TRANSFER DEVICE FOR THIS LIGHT. PROVIDE AN UNSWITCHED NORMAL POWER TO THE NEARBY 120V CIRCUIT.
15. PROVIDE UNSWITCHED CONNECTION FROM CIRCUIT NEARBY DESIGNATED CIRCUIT IN CONTROL ZONE MARKED TO GENERATOR TRANSFER DEVICE. REFER TO E401 FOR SWITCHING DETAIL.
16. STAIR 114 LIGHTING SHALL BE ON/OFF CONTROL WITH LOBBY CONTROL LIGHTING SEE G7/E401.

REVISIONS:

DESIGN ENGINEER: KSC
PROJECT ENGINEER: KSC
DRAWN BY: TLH
ISSUED: 10/05/2015
OA PROJECT #: 015-0534

PROFESSIONAL ELECTRICAL ENGINEER KELLY S. CARMAN E-10867 STATE OF NEBRASKA
11/11/2015 01:14:14 AM

PROJECT CONSULTANTS

STRUCTURAL ENGINEER
Voss & Associates, Inc.
201 North 7th Street, Suite 200
Lincoln, NE 68508
402-476-5055

MECHANICAL/ELECTRICAL ENGINEERS
Olsson Associates
601 P Street, Suite 200
Lincoln, NE 68508
402-474-6311

City of Hastings

Hastings City Auditorium Interior Renovation

SINCLAIR hille architects
700 Q St. Lincoln, NE 68508 T: 402 476 7331 F: 402 476 8341

First Level Lighting Plan

SHA PROJECT NO. 15011

E201

A1 FIRST LEVEL LIGHTING PLAN

SCALE: 1/8" = 1'-0"

© Copyright SINCLAIR HILLE ARCHITECTS

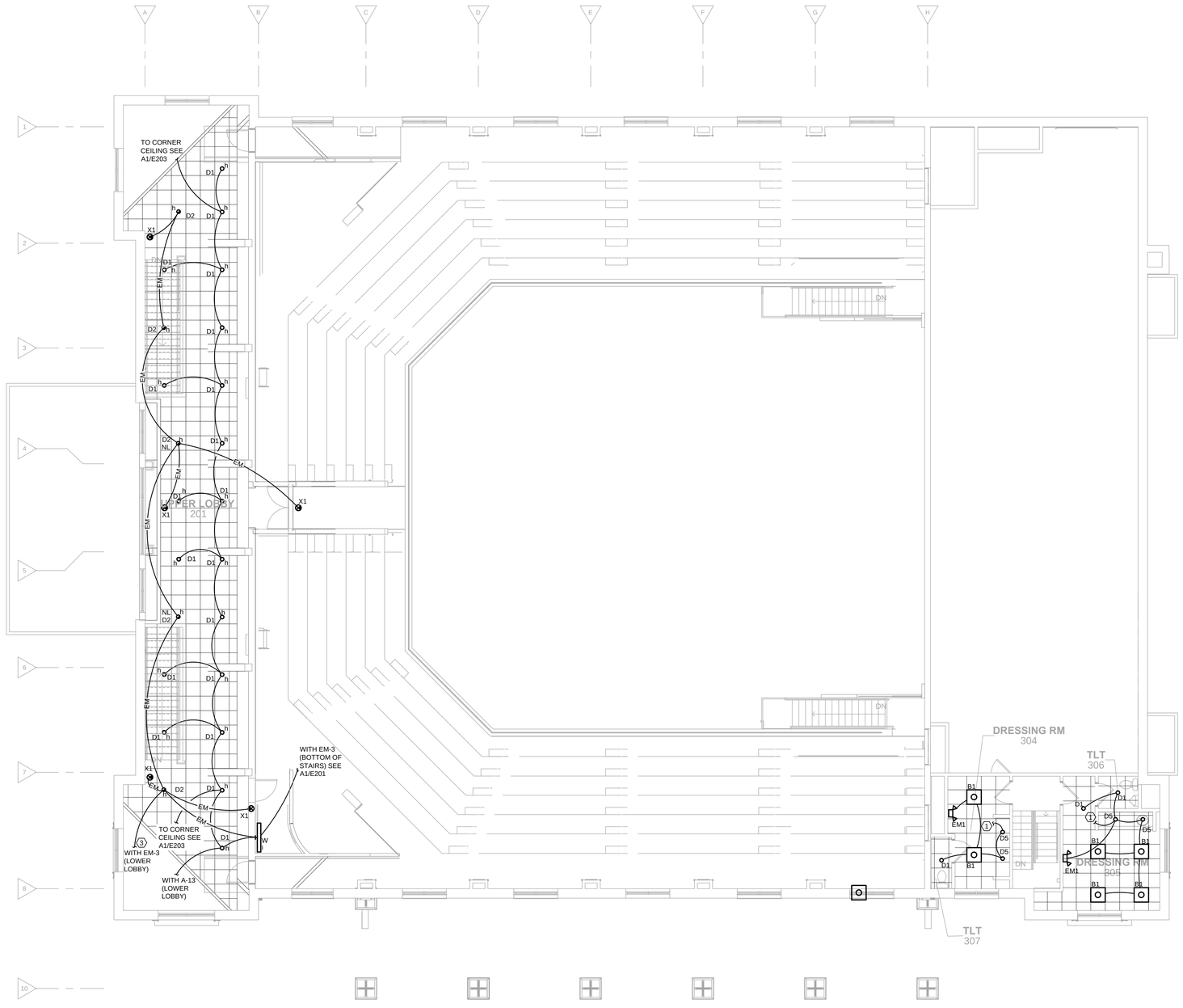

SHEET NOTES:

1. CONNECT NEW FIXTURES TO THE CIRCUIT WHICH ORIGINALLY SERVED LIGHTING IN THIS AREA. REUSE EXISTING CONTROLS.
2. PROVIDE A GENERATOR TRANSFER DEVICE FOR THIS LIGHT. PROVIDE AN UNSWITCHED CONNECTION TO THE NEARBY 120V CIRCUIT.
3. PROVIDE UNSWITCHED CONNECTION FROM CIRCUIT NEARBY DESIGNATED CIRCUIT IN CONTROL ZONE MARKED TO GENERATOR TRANSFER DEVICE. REFER TO E401 FOR SWITCHING DETAIL.

A1 SECOND LEVEL LIGHTING PLAN

SCALE: 1/8" = 1'-0"

REVISIONS:

DESIGN ENGINEER: KSC
PROJECT ENGINEER: KSC
DRAWN BY: TLH
ISSUED: 10/05/2015
OA PROJECT #: 015-0534

PROFESSIONAL ELECTRICAL ENGINEER KELLY S. CARMAN E-10867 STATE OF NEBRASKA
11/11/2015 01:14:52 AM

PROJECT CONSULTANTS

STRUCTURAL ENGINEER
Voss & Associates, Inc.
201 North 7th Street, Suite 300
Lincoln, NE 68508
402-476-5055

MECHANICAL/ELECTRICAL ENGINEERS
Olsson Associates
601 P Street, Suite 200
Lincoln, NE 68508
402-474-6311

City of Hastings

Hastings City Auditorium Interior Renovation

SINCLAIR hille architects
700 Q St. Lincoln, NE 68508 T: 402 476 7331 F: 402 476 8341

Second Level Lighting Plan

SHA PROJECT NO. 15011

E202

© Copyright SINCLAIR HILLE ARCHITECTS

F:\Projects\015-0534\40-Design\AutoCAD\100 Hastings Auditorium\Sheets\MECH\Electrical\E_NLTG3A_50534.dwg Andrew Ohlman

SHEET NOTES:

1. PROVIDE UNSWITCHED CONNECTION FROM CIRCUIT NEARBY DESIGNATED CIRCUIT IN CONTROL ZONE MARKED TO GENERATOR TRANSFER DEVICE. REFER TO E401 FOR SWITCHING DETAIL.

A1 AUDITORIUM LIGHTING PLAN

SCALE: 1/8" = 1'-0"

REVISIONS:

DESIGN ENGINEER: KSC
PROJECT ENGINEER: KSC
DRAWN BY: TLH
ISSUED: 10/05/2015
OA PROJECT #: 015-0534

PROFESSIONAL ELECTRICAL ENGINEER
KELLY S. CARMAN
E-10867
STATE OF NEBRASKA
11/11/2015 01:53:31 AM

PROJECT CONSULTANTS

STRUCTURAL ENGINEER
Voss & Associates, Inc.
201 North 7th Street, Suite 200
Lincoln, NE 68508
402-476-5055

MECHANICAL/ELECTRICAL ENGINEERS
Olsson Associates
601 P Street, Suite 200
Lincoln, NE 68508
402-474-6311

City of Hastings

Hastings City Auditorium Interior Renovation

SINCLAIR | hille architects
700 Q St. Lincoln, NE 68508 T: 402 476 7331 F: 402 476 8341

Auditorium Lighting Plan

SHA PROJECT NO. 15011

E203

© Copyright SINCLAIR HILLE ARCHITECTS

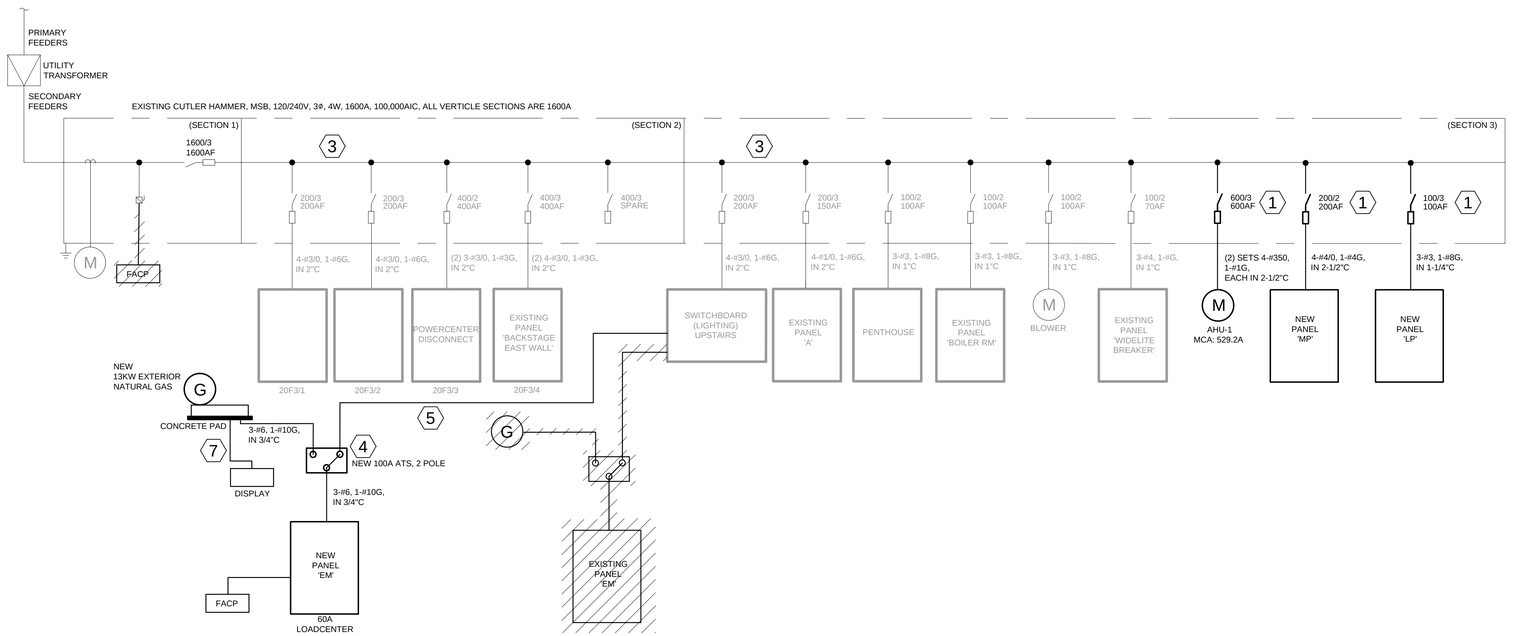

PANEL NO.	EM	TYPE	LIGHTING & APPLIANCE		
SERVICE VOLTAGE	120/240-1ø	PHASE BUS RATING	60A	MOUNTING	Surface
MAIN BREAKER SIZE	50A	NEUTRAL BUS RATING	60A	SHORT CIRCUIT RATING	10kAIC

DESCRIPTION	C/B AMP	AMPS A	AMPS B	CKT. NO.	CKT. NO.	AMPS A	AMPS B	C/B AMP	DESCRIPTION
AUDITORIUM EM LIGHTING	20/1	1077		1	2	840		20/1	FIRE ALARM CONTROL PANEL
LOBBY EM LIGHTING	20/1		304	3	4		0	20/1	SPARE
GENERAL AND EXTERIOR EM LIGHTING	20/1	131		5	6	0		20/1	SPARE
SPARE	20/1		0	7	8		0	20/1	SPARE
SPARE	20/1	0		9	10	0		20/1	SPARE
SPARE	20/1		0	11	12		0	20/1	SPARE
SPACE	---	0		13	14	0		---	SPACE
SPACE	---		0	15	16		0	---	SPACE
SPACE	---	0		17	18	0		---	SPACE
SPACE	---		0	19	20		0	---	SPACE
SPACE	---	0		21	22	0		---	SPACE
SPACE	---		0	23	24		0	---	SPACE
SPACE	---	0		25	26	0		---	SPACE
SPACE	---		0	27	28		0	---	SPACE
SPACE	---	0		29	30	0		---	SPACE

TOTAL PHASE A: 21.3 AMPS 2.6 KVA
TOTAL PHASE B: 3.2 AMPS 0.4 KVA
TOTAL CONNECTED LOADS: 2.4 KVA
TOTAL CONNECTED LOADS PLUS SPARES: 2.9 KVA
ESTIMATED DEMAND LOADS: 3.0 KVA

PANEL NO.	A	TYPE	EXISTING PANEL		
SERVICE VOLTAGE	120/240-1ø	PHASE BUS RATING	60A	MOUNTING	Surface
MAIN BREAKER SIZE	MLO	NEUTRAL BUS RATING	60A	SHORT CIRCUIT RATING	10kAIC

DESCRIPTION	C/B AMP	AMPS A	AMPS B	CKT. NO.	CKT. NO.	AMPS A	AMPS B	C/B AMP	DESCRIPTION
UNDER BALCONY (SOUTH)	20/1	0		1	2	0		20/1	UNDER BALCONY (NORTH)
UNDER BALCONY (SOUTH)	20/1		0	3	4		0	20/1	UNDER BALCONY (NORTH)
EXHAUST FAN (MEN)	20/1	0		5	6	0		---	SPACE
EXHAUST FAN (WOMEN)	20/1		0	7	8		0	---	SPACE
WATERCOOLERS (2)	20/1	960		9	10	0		20/1	PANEL LIGHT-HEAT (MENS)
HEAT (WOMEN)	20/1		0	11	12		0	20/1	STORAGE ROOM (CENTER)
L - LOBBY	20/1	1321		13	14	0		20/1	LOBBY (HEAT)
SPACE	---		0	15	16		0	20/1	HAND DRYER SOUTH (MENS)
SPACE	---	0		17	18	0		20/1	HAND DRYER NORTH (MENS)
2 MARQUEE TIME CLOCK	20/1		0	19	20		0	20/1	HAND DRYER NORTH (WOMENS)
SPACE	---	0		21	22	0		20/1	HAND DRYER SOUTH (SOMENS)
KITCHEN ICE MACHINE	20/1		0	23	24		0	60/2	SUB PANEL
HOT WATER HEATER (KITCHEN)	30/2	0		25	26	0		---	-----
-----	---		0	27	28		0	---	SPACE
EMERGENCY LIGHTS	15/1	0		29	30	0		15/1	RELAYS

TOTAL PHASE A: 21.8 AMPS 2.6 KVA
TOTAL PHASE B: 0.0 AMPS 0.0 KVA
TOTAL CONNECTED LOADS: 2.3 KVA
TOTAL CONNECTED LOADS PLUS SPARES: 2.6 KVA
ESTIMATED DEMAND LOADS: 2.7 KVA

PANEL NO.	MP	TYPE	NEW		
SERVICE VOLTAGE	120/240 3ø	PHASE BUS RATING	225A	MOUNTING	Surface
MAIN BREAKER SIZE	MLO	NEUTRAL BUS RATING	225A	SHORT CIRCUIT RATING	45kAIC

DESCRIPTION	C/B AMP	VOLT AMPS A	VOLT AMPS B	VOLT AMPS C	CKT. NO.	CKT. NO.	VOLT AMPS A	VOLT AMPS B	VOLT AMPS C	C/B AMP	DESCRIPTION
M - UH-1	15/2	1000			1	2	7751			70/3	M - HP-1
-----	---		1000		3	4		7751		---	-----
M - UH-2	15/2			1000	5	6			7751	---	-----
-----	---	1000			7	8	7751			70/3	M - HP-2
M - BC-1	20/2		960		9	10		7751		---	-----
-----	---			960	11	12			7751	---	-----
M - BC-2	20/2	960			13	14	1920			20/2	M - HP-3
-----	---		960		15	16		1920		---	-----
M - AC-1	15/2			42	17	18			1200	20/1	O - EXTERIOR SIGNAGE
-----	---	42			19	20	0			20/1	SPARE
WILD LEG	---		0		21	22		0		---	WILD LEG
R - HVAC RECEPT	20/1			900	23	24			0	20/1	SPARE
SPARE	20/1	0			25	26	0			20/1	SPARE
WILD LEG	---		0		27	28		0		---	WILD LEG
SPARE	20/1			0	29	30			0	20/1	SPARE
SPARE	20/1	0			31	32	0			20/1	SPARE
WILD LEG	---		0		33	34		0		---	WILD LEG
SPARE	20/1			0	35	36			0	20/1	SPARE
SPARE	20/1	0			37	38	0			20/1	SPARE
WILD LEG	---		0		39	40		0		---	WILD LEG
SPARE	20/1			0	41	42			0	20/	SPARE

TOTAL PHASE A: 147.4 AMPS 20.4 KVA
TOTAL PHASE B: 146.8 AMPS 20.3 KVA
TOTAL PHASE C: 141.5 AMPS 19.6 KVA
TOTAL CONNECTED LOADS: 60.4 KVA
ESTIMATED DEMAND LOADS: 66.2 KVA

L - LIGHTING
R - RECEPTACLE
M - MOTOR
O - OTHER

PANEL NO.	LP	TYPE	LIGHTING & APPLIANCE		
SERVICE VOLTAGE	120/240-1ø	PHASE BUS RATING	100A	MOUNTING	Surface
MAIN BREAKER SIZE	MLO	NEUTRAL BUS RATING	100A	SHORT CIRCUIT RATING	45kAIC

DESCRIPTION	C/B AMP	VOLT AMPS A	VOLT AMPS B	CKT. NO.	CKT. NO.	VOLT AMPS A	VOLT AMPS B	C/B AMP	DESCRIPTION
L - STORAGE ROOM 108, ALCOVE	20/1	346		1	2	0		20/1	SPARE
GFCI R - REFRIG.	20/1		800	3	4		0	20/1	SPARE
L - FIRST FLOOR COLUMN	20/1	800		5	6	1384		20/1	L - AUDITORIUM ACCENT
L - FIRST FLOOR AUDITORIUM	20/1		1277	7	8		1408	20/1	L - AUDITORIUM PERIMETER
R - BAR/STRDAGE	20/1	540		9	10	0		20/1	SPARE
L - KITCHEN	20/1		288	11	12		1080	20/1	L - AUDITORIUM CENTRAL
L - STORAGE 106	20/1	216		13	14	1512		20/1	L - AUDITORIUM CENTRAL
L - EXTERIOR EGRESS	20/1		50	15	16		0	20/1	SPARE
L-S. MEETING ROOM/STORAGE	20/1	399		17	18	0		20/1	SPARE
SPARE	20/1		0	19	20		0	20/1	SPARE
R - SERVICE RECEPTACLE	20/1	180		21	22	0		20/1	SPARE
SPARE	20/1		0	23	24		0	20/1	SPARE
SPARE	20/1	0		25	26	0		20/1	SPARE
SPARE	20/1		0	27	28		0	20/1	SPARE
SPARE	20/1	0		29	30	0		20/1	SPARE
SPACE	---		0	31	32		0	---	SPACE
SPACE	---	0		33	34	0		---	SPACE
SPACE	---		0	35	36		0	---	SPACE
SPACE	---	0		37	38	0		---	SPACE
SPACE	---		0	39	40		0	---	SPACE
SPACE	---	0		41	42	0		---	SPACE

TOTAL PHASE A: 53.7 AMPS 6.4 KVA
TOTAL PHASE B: 49.4 AMPS 5.9 KVA
TOTAL CONNECTED LOADS: 10.3 KVA
TOTAL CONNECTED LOADS PLUS SPARES: 12.4 KVA
ESTIMATED DEMAND LOADS: 12.4 KVA

L - LIGHTING
R - RECEPTACLE
M - MOTOR
O - OTHER

SHEET NOTES:

1. PROVIDE NEW FUSIBLE SWITCH IN AVAILABLE SPACE.
2. PROVIDE NEW GFCI CIRCUIT BREAKER IN EXISTING LOAD CENTER.
3. LABEL EXISTING SWITCHES WITH WHAT LOAD IS SERVED.
4. REPLACE EXISTING ATS WITH NEW ATS IN EXISTING LOCATION. PROVIDE 100A, 2 POLE 120/240V ATS, CUMMINS ONAN RST 100/4954.
5. REUSE EXISTING CONDUIT AND WIRE.
6. PROVIDE NEW 13KW EXTERIOR NATURAL GAS GENERATOR IN WEATHER RATED ENCLOSED. CUMMINS RS13A-13GSBA-6711B-Aø43X821, WITH 60/2 CIRCUIT BREAKER.
7. PROVIDE 1-1/2" CONDUIT FROM GENERATOR TO GENERATOR DISPLAY. PROVIDE GENERATOR/DISPLAY CONTROL UMBILICAL CORD IN CONDUIT.

REVISIONS:

DESIGN ENGINEER: KSC
PROJECT ENGINEER: KSC
DRAWN BY: TLH
ISSUED: 10/05/2015
OA PROJECT #: 015-0534

PROFESSIONAL ELECTRICAL ENGINEER KELLY S. CARMAN E-10867 STATE OF NEBRASKA
11/11/2015 01:51:37 AM

PROJECT CONSULTANTS
STRUCTURAL ENGINEER
Voss & Associates, Inc.
201 North 7th Street, Suite 300
Lincoln, NE 68508
402-476-5055
MECHANICAL/ELECTRICAL ENGINEERS
Olsson Associates
601 P Street, Suite 200
Lincoln, NE 68508
402-474-6311

City of Hastings

Hastings City Auditorium Interior Renovation

SINCLAIR hille architects
700 Q St. Lincoln, NE 68508 T: 402 476 7331 F: 402 476 8341

Electrical One-line Diagram and Panel Schedules

SHA PROJECT NO. 15011

E301

© Copyright SINCLAIR HILLE ARCHITECTS

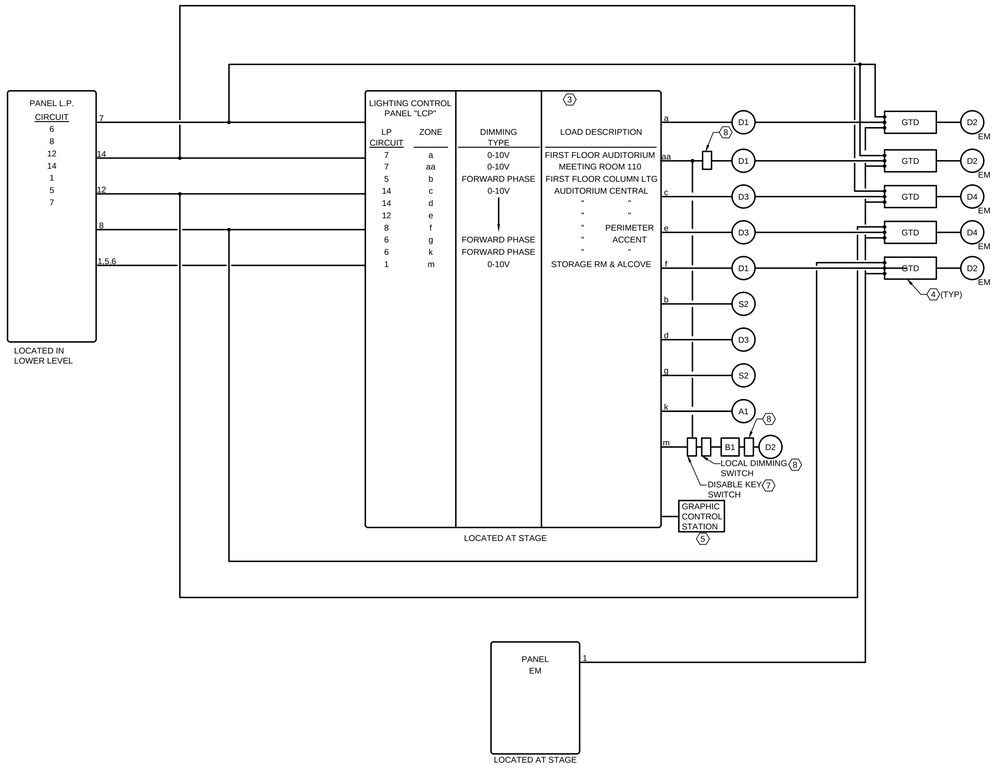

F1 AUDITORIUM LIGHTING CONTROLS WIRING DIAGRAM

NOT TO SCALE

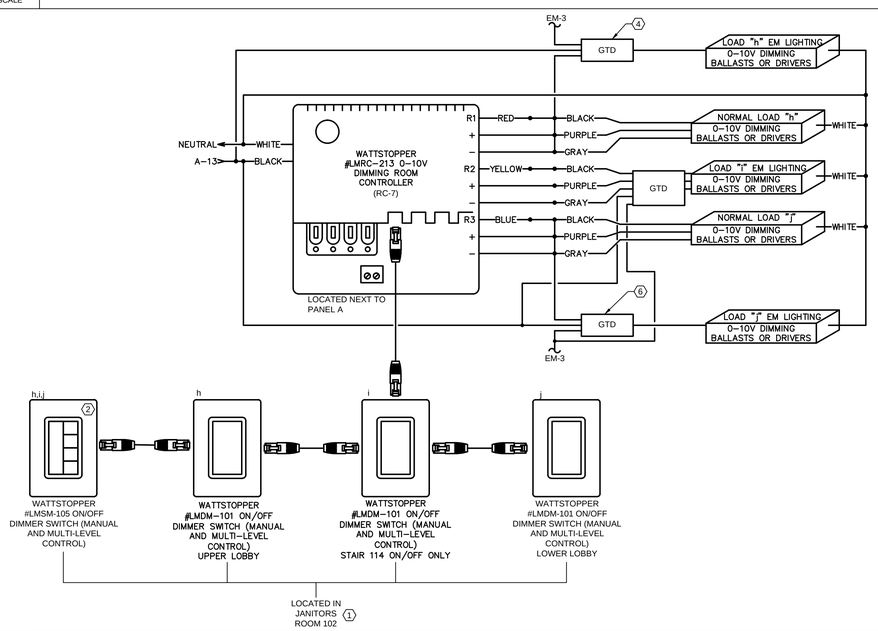

A1 LOBBY LIGHTING CONTROLS WIRING DIAGRAM

NOT TO SCALE

SHEET NOTES:

1. ENGRAVE OR COORDINATE WITH MANUFACTURER TO PROVIDE ENGRAVED FACEPLATES. EACH SWITCH SHALL BE LABELED WITH THE AREA/SCENE IT CONTROLS. LOWERCASE LETTERS SHOWN ON ELEVATION ARE FOR REFERENCE ONLY AND SHALL NOT BE ENGRAVED ON THE FACEPLATE.
2. PROVIDE ONE PRESET SWITCH AT 100% FULL OUTPUT, COORDINATE OTHER THREE PRESET SCENES WITH OWNER AT TIME OF CONFIGURATION.
3. 16 ZONE LIGHTING CONTROL PANEL "LCP"; ILLUMINATING LIGHTING CONTROL "ILC": LL-16-S
4. GENERATOR TRANSFER DEVICE "GTD" COOPER CEPC-D-F-S LOCATE GTD DEVICE NEAR LIGHTING CONTROL PANEL.
5. GRAPHIC CONTROL STATION. ILC TOUCH ACTIVATED GRAPHIC CONTROL STATION LS-TSS-7.0
6. GENERATOR TRANSFER DEVICE "GTD" COOPER CEPC-D-F-S LOCATE DEVICE IN JANITOR ROOM 102.
7. PROVIDE ILC DISABLE KEY SWITCH TO DEACTIVATE LOCAL SWITCHING DURING PERFORMANCES ILC-LS-DKS-GY; LS-PL-P-GY-I.
8. PROVIDE ILC DIMMER LS-SD-GY; PLATE LSPL-P-GY-I.

REVISIONS:

DESIGN ENGINEER: KSC
PROJECT ENGINEER: KSC
DRAWN BY: TLH
ISSUED: 10/05/2015
OA PROJECT #: 015-0534

PROFESSIONAL ELECTRICAL ENGINEER KELLY S. CARMAN E-10867 STATE OF NEBRASKA
11/11/2015 01:53:34 AM

PROJECT CONSULTANTS
STRUCTURAL ENGINEER
Voss & Associates, Inc.
201 North 7th Street, Suite 300
Lincoln, NE 68508
402-476-5055
MECHANICAL/ELECTRICAL ENGINEERS
Olsson Associates
601 P Street, Suite 200
Lincoln, NE 68508
402-474-6311

City of Hastings

Hastings City Auditorium Interior Renovation

SINCLAIR hille architects
700 Q St. Lincoln, NE 68508 T: 402 476 7331 F: 402 476 8341

Electrical Details

SHA PROJECT NO. 15011

E401

© Copyright SINCLAIR HILLE ARCHITECTS

ID	DESCRIPTION	MANUFACTURER	CATALOG NO.	LAMPS	LOAD	VOLTAGE	MOUNTING	COMMENTS
A1	6" DIAMETER, X4' OPAL ACRYLIC CYLINDER, 0-10V, DIMMING	SCOTT	S2352-L48-35K-LF06-BA-OA180-DIM-SWC	6000 LUMENS, 3500K LED'S	48	120	PENDANT	
B1	2X2 RECESSED LED TROFFER, 3000K, 80CRI	INDY	S2X2BL-3930U-40-U-WH3	3900 LUMENS, 4100K LED'S	36	120	RECESSED	
B2	2X2 RECESSED LED TROFFER, 3000K, 80CRI, EM BACKUP	INDY	S2X2BL-3930U-40-U-WH3	3900 LUMENS, 4100K LED'S	36	120	RECESSED	PROVIDE WITH GENERATOR BACKUP, DIMMING AS INDICATED
D1	6" ROUND LED HYPERBOLIC DOWNLIGHT WHITE TRIM RING	INDY	L6-17401-G2-L600HW-CQ-WH	1700 LUMENS, 4000K LED'S	22	120	RECESSED	
D2	6" ROUND LED HYPERBOLIC DOWNLIGHT WHITE TRIM RING	INDY	L6-17401-G2-L600HW-CQ-WH	1700 LUMENS, 4000K LED'S	22	120	RECESSED	PROVIDE WITH GENERATOR BACKUP, DIMMING AS INDICATED
D3	6" ROUND LED HYPERBOLIC DOWNLIGHT WHITE TRIM RING	INDY	L6-75401-G2-L600HW-CQ-WH	7500 LUMENS, 4000K LED'S	72	120	RECESSED	
D4	6" ROUND LED HYPERBOLIC DOWNLIGHT WHITE TRIM RING	INDY	L6-75401-G2-L600HW-CQ-WH	7500 LUMENS, 4000K LED'S	72	120	RECESSED	PROVIDE WITH GENERATOR BACKUP
D5	4" ROUND LED HYPERBOLIC DOWNLIGHT WHITE TRIM RING	INDY	L4-0840U-G3-L400HW-CQ-WH	800 LUMENS, 4000K LED'S	7.7	120	RECESSED	
EM1	BUG-EYE FIXTURE WITH 90MIN BATTERY BACKUP	EXITRONIX	LED-90	INTEGRAL LED	2.2	120	RECESSED	
EM2	EXTERIOR EMERGENCY EGRESS LED	EXITRONIX	TRL-ACEM-BR-CL	INTEGRAL LED	11	120	SURFACE	PROVIDE WITH GENERATOR BACKUP
F	4'-0" SURFACE MOUNTED LED WRAPAROUND	LITHONIA	LBL4-40L-EOHN-LP840	4000K LED	27	120	SURFACE	PROVIDE WITH GENERATOR BACKUP
L1	4'-0" RECESSED LINEAR LED, 3500K, 80 CRI	LUMENWERX	VIA2R-HLO-LED-80-400-40-4FT-UNV-D-1-DTR-W	4000K LED	25	120	RECESSED	
L2	2'-0" RECESSED LINEAR LED, 3500K, 80 CRI	GE	BL-42-0-A6-X-V-WHTE	4000K LED	14	120	RECESSED	
R1	EXTERIOR 8" CAN LED RETROFIT	EATON	LD8ART-20-D010TE-ER8A-20-8-40-8LW0-H-WF	4000K LED	23	120	RETROFIT	
R2	EXTERIOR 8" CAN LED RETROFIT WITH EM BACKUP	EATON	LD8ART-20-D010TE-ER8A-20-8-40-8LW0-H-WF	4000K LED	23	120	RETROFIT	PROVIDE WITH GENERATOR BACKUP
S1	CHROME LED VANITY SCONCE	LIGHTOLOGY	GKV64393	10W LED	10	120	SURFACE	
S2	EXISTING SCONCE	---------	---------	MEDIUM SCREW BASE	100	120	SURFACE	MAINTAIN EXISTING MOUNTING HEIGHT
T1	EXTERIOR SURFACE MOUNTED TRAPEZOIDAL LED	TRACE-LITE	TLED-TR-36-VSWW	4700K LED	41	120	SURFACE	
X1	UNIVERSAL LED EXIT SIGN	EXITRONIX	ILX-R-EM-WH	INTEGRAL LED	5	120	SURFACE	
W	WALL MOUNT 4' LED	HE WILLIAMS	LLMS-4-LED*UT41-840-S-RD-UNV	4100LED	52	120	WALL	

GENERAL LUMINAIRE NOTES:

A. REFER TO THE ARCHITECTURAL REFLECTED CEILING PLANS (RCP) FOR THE EXACT LOCATION OF ALL LIGHT FIXTURES. THE RCP SHALL TAKE PRECEDENCE OVER THE LIGHTING PLAN IF THERE ARE ANY DISCREPANCIES. COORDINATE LIGHT FIXTURE LAYOUT WITH HVAC/DUCTWORK/DIFFUSERS.

B. COORDINATE THE MOUNTING HEIGHT OF ALL LIGHT FIXTURES WITH THE ARCHITECTURAL PLANS, ELEVATION OR ARCHITECT PRIOR TO ROUGH-IN.

C. PROVIDE ALL ACCESSORIES INCLUDING TRIM RINGS, STEMS, CANOPIES, CORDS, MOUNTING HARDWARE, RESTRAINTS, HURRICANE CLIPS, ETC., NECESSARY TO MOUNT THE LIGHT FIXTURE IN A COMPLETE, PROPER, AND APPROVED METHOD.

D. PROVIDE ANY SEISMIC BRACING AND/OR RESTRAINTS REQUIRED BY THE AUTHORITY HAVING JURISDICTION.

E. PROVIDE CHAIN HANGERS FOR ALL SUSPENDED CHANNELS AND/OR STRIP SIGHTS IN UNFINISHED AREAS.

F. PROVIDE A DISCONNECTING MEANS THAT OPENS ALL SUPPLY CONDUCTOR TO ANY BALLAST SERVING FLUORESCENT LIGHT FIXTURES THAT UTILIZE DOUBLE-ENDED LAMPS AND THAT CAN BE SERVICED IN PLACE. THE DISCONNECTING MEANS SHALL ALSO OPEN THE NEUTRAL CONDUCTOR TO THE BALLAST WHEN THE LUMINAIRE IS SERVED BY A MULTI-WIRE BRANCH CIRCUIT.

G. SUPPORT ALL LUMINAIRES COMPLETELY INDEPENDENT OF ANY SUSPENDED CEILING.

H. WHEN REQUIRED, PROVIDE ALL NECESSARY LOW-VOLTAGE TRANSFORMERS, CONNECTORS, MOUNTING HARDWARE, ETC, FOR A COMPLETE LOW-VOLTAGE LIGHTING SYSTEM. INSTALL REMOTE LOW-VOLTAGE TRANSFORMERS IN A CONCEALED ACCESSIBLE AREA.

I. WHEN REQUIRED, PROVIDE ALL NECESSARY MOUNTING HARDWARE, FITTINGS, CONNECTORS, PENDANT FEEDS, END CAPS, ETC, FOR A COMPLETE TRACK LIGHTING SYSTEM.

J. PROVIDE EXTENSIONS FOR RECESSED LIGHT FIXTURES WHERE REQUIRED BY THE CEILING THICKNESS. COORDINATE WITH THE ARCHITECTURAL DETAILS.

K. WHEN REQUIRED, PROVIDE FIRE-RATED LIGHT FIXTURE COVERS (LUMINAIRE TENTS) FOR THE LIGHT FIXTURE INSTALLED IN FIRE-RATED CEILING ASSEMBLIES OR PROVIDE FIRE RATED BOXES ARE ON EACH LIGHT FIXTURE. COORDINATE LOCATION OF FIRE-RATED CEILING ASSEMBLIES WITH THE ARCHITECTURAL PLANS.

L. PROVIDE LIGHT FIXTURES THAT ARE INSULATED CEILING (IC) RATED WHEN RECESSED INTO INSULATED CEILING. IF THE LIGHT FIXTURE CAN NOT BE PROVIDED WITH AN IC RATING, INSULATION SHALL NOT BE INSTALLED ABOVE OR WITHIN THREE INCHES OF THE LIGHT FIXTURE. COORDINATE LOCATION OF INSULATED CEILING WITH THE ARCHITECTURAL PLANS.

M. ALL EXIT SIGNS SHALL BE EQUIPPED WITH INTEGRAL EMERGENCY BACKUP BATTERIES THAT PROVIDE A MINIMUM 90 MINUTES OF RUN TIME. CIRCUIT EXIT SIGNS TO UNSWITCHED EMERGENCY CIRCUIT UNLESS OTHERWISE INDICATED. BOTTOM OF EXIT SIGN SHALL BE LOCATED 6" ABOVE DOOR FRAME.

N. COORDINATE MOUNTING LOCATION, NUMBER OF FACES AND DIRECTIONAL ARROWS OF EXIT SIGNS AS REQUIRED TO MARK PATHS OF EGRESS TO THE SATISFACTION OF THE AUTHORITY HAVING JURISDICTION.

O. EACH EMERGENCY FIXTURE SHALL BE PROVIDED WITH A FACTORY-INSTALLED OR FIELD-INSTALLED EMERGENCY BATTERY THAT PROVIDES A MINIMUM OF 90 MINUTES OF RUN TIME.

P. PROVIDE AN EMERGENCY LED DRIVER FOR LED LIGHT FIXTURES WHERE THEY ARE USED FOR BOTH NORMAL AND EMERGENCY LIGHTS.

Q. LUMINARIES DENOTED BY "NL" INDICATE NIGHT LIGHT. EMERGENCY FIXTURES NOT MARKED WITH "NL" SHALL BE SWITCHED AS SHOWN ON PLANS.

R. LOCATE OCCUPANCY SENSORS A MINIMUM OF 4-6 FEET FROM MECHANICAL DIFFUSER. COORDINATE LOCATION WITH OCCUPANCY SENSOR MANUFACTURER TO PROVIDE ADEQUATE COVERAGE.

S. WALL MOUNTED SENSOR SWITCHES SHALL BE SET TO MANUAL ON.

H1 LIGHTING FIXTURE SCHEDULE

NOT TO SCALE

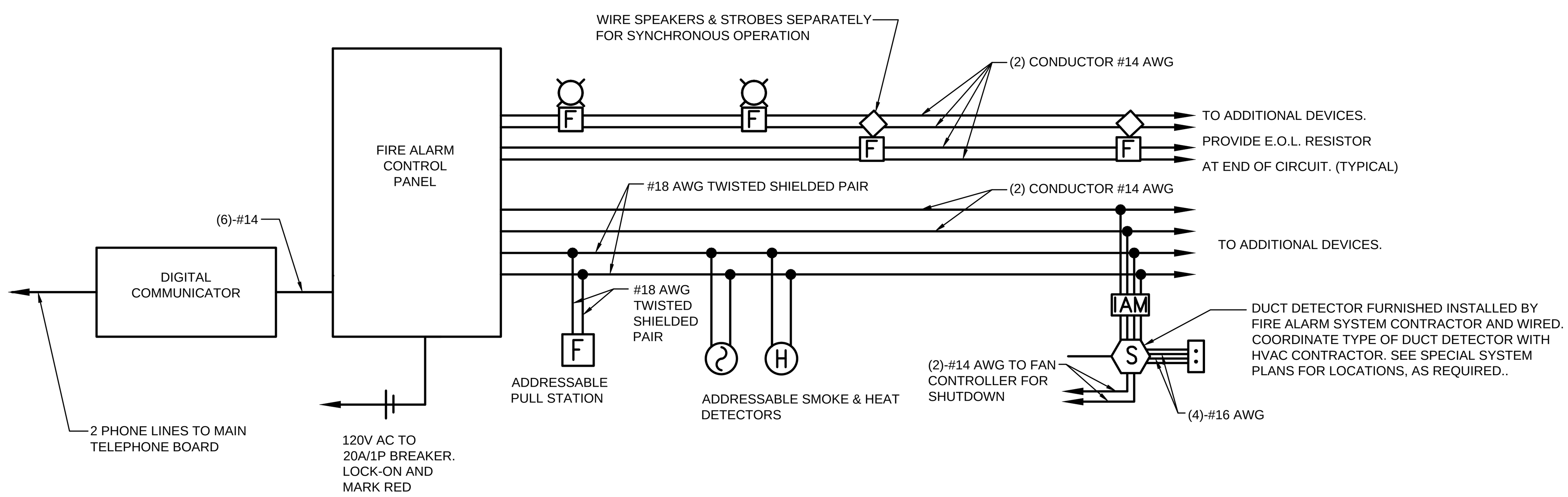

F1 FIRE ALARM DEVICE WIRING DIAGRAM

NOT TO SCALE

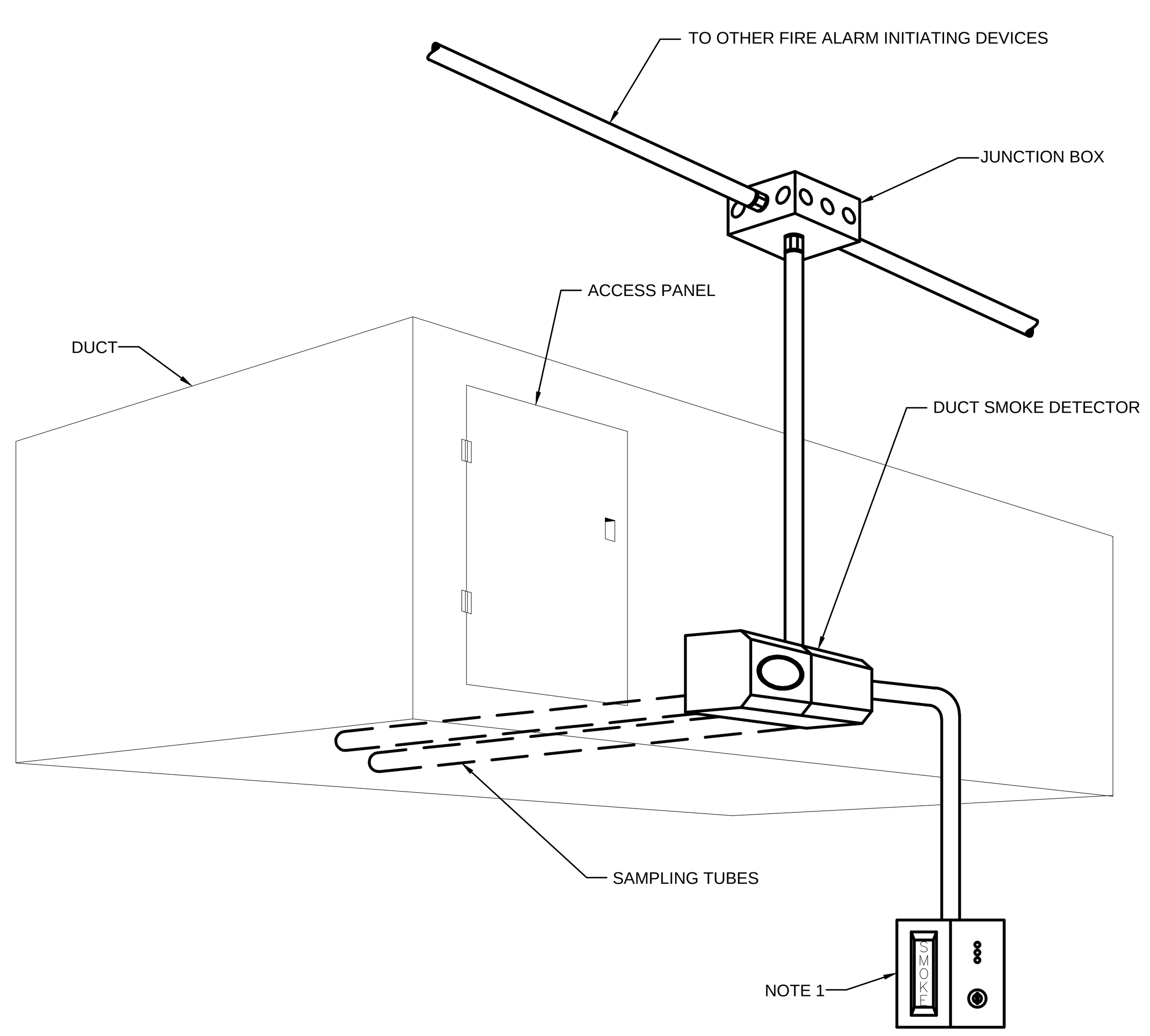

GENERAL NOTES APPLICABLE TO THIS DETAIL:

A. CONNECT DUCT SMOKE DETECTOR TO FIRE ALARM CONTROL PANEL SUCH THAT DUCT SMOKE DETECTOR INITIATES A SUPERVISORY SIGNAL AT THE FIRE ALARM CONTROL PANEL UPON DUCT SMOKE DETECTOR SMOKE ACTIVATION. IF FIRE ALARM CONTROL PANEL DOES NOT EXIST, ACTIVATION OF THE DUCT SMOKE DETECTOR SHALL ACTIVATE AN AUDIBLE AND VISUAL SIGNAL AT A CONTINUOUSLY ATTENDED LOCATION.

B. INTERLOCK HVAC UNIT WITH DUCT SMOKE DETECTOR SUCH THAT HVAC UNIT SUPPLY FAN SHUTS DOWN IN ALARM CONDITION. PROVIDE ALL RELAYS REQUIRED TO ACCOMPLISH THE INTERLOCK.

NOTES APPLICABLE TO THIS DETAIL:

1. PROVIDE A REMOTE KEYED TEST STATION WITH VISUAL STATUS ANNUNCIATOR WHEN THE DUCT SMOKE DETECTOR IS INSTALLED IN A CONCEALED LOCATION GREATER THAN 10'-0" ABOVE FINISHED FLOOR OR WHEN DUCT SMOKE DETECTOR'S STATUS INDICATORS ARE NOT READILY VISIBLE. COORDINATE LOCATION WITH THE AUTHORITY HAVING JURISDICTION AND THE OWNER PRIOR TO ROUGH-IN.

2. SMOKE DETECTORS SHALL BE INSTALLED IN RETURN AIR SYSTEMS WITH A DESIGN CAPACITY GREATER THAN 2,000 CFM, IN THE RETURN AIR DUCT OR PLENUM UPSTREAM OF ANY FILTERS, EXHAUST AIR CONNECTIONS, OUTDOOR AIR CONNECTIONS, OR DECONTAMINATION EQUIPMENT AND APPLIANCES.

A1 DUCT SMOKE DETECTOR DETAIL

NOT TO SCALE

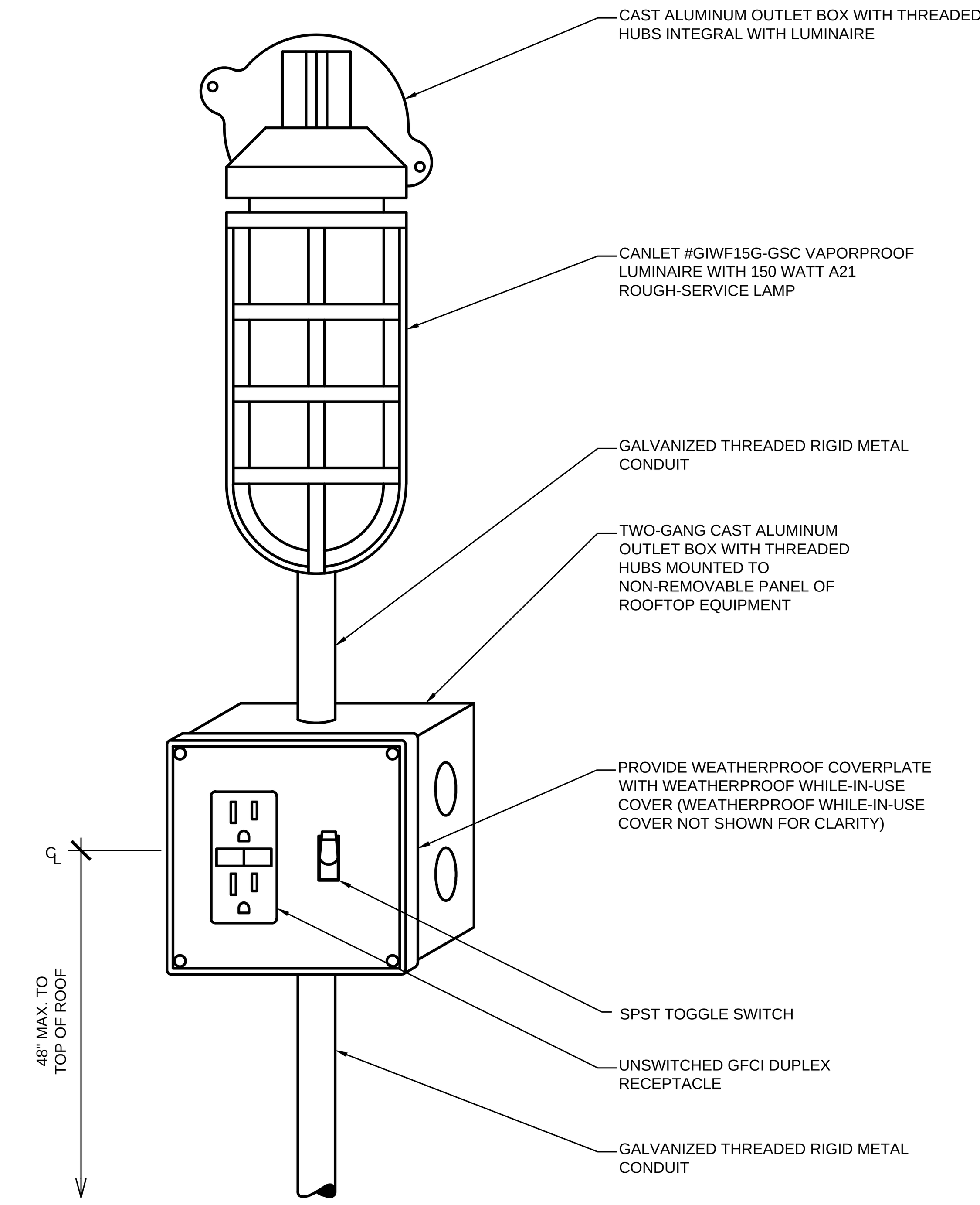

A6 AHU SERVICE RECEPTACLE AND LIGHT DETAIL

NOT TO SCALE

F:\Projects\015-0534\40-Design\AutoCAD\100 Hastings Auditorium\Sheets\MECH\Electrical\E_DTL_50534.dwg Andrew Ohlman

REVISIONS:

DESIGN ENGINEER: KSC
PROJECT ENGINEER: KSC
DRAWN BY: TLH
ISSUED: 10/05/2015
OA PROJECT #: 015-0534

PROFESSIONAL ELECTRICAL ENGINEER KELLY S. CARMAN E-10867 11/10/15 STATE OF NEBRASKA

11/11/2015 8:15:18 AM

PROJECT CONSULTANTS

STRUCTURAL ENGINEER
Voss & Associates, Inc
201 North 7th Street, Suite 200
Lincoln, NE 68508
402-476-6365

MECHANICAL/ELECTRICAL ENGINEERS
Olsson Associates
601 P Street, Suite 200
Lincoln, NE 68508
402-474-6311

City of Hastings

Hastings City Auditorium Interior Renovation

SINCLAIR hille architects
700 Q St. Lincoln, NE 68508 T: 402 476 7331 F: 402 476 8341

Electrical Details and Schedules

SHA PROJECT NO. 15011

E402

© Copyright SINCLAIR HILLE ARCHITECTS